ESTF2020

CIRiS: Compact Infrared Radiometer in Space

June 23, 2020

Presenter and PI: *David Osterman*

Team: *A. Amparan, A. Ghandour, T. Kampe, P. Kerrigan, J. Necas, D. Piqueira, G. Reavis, R. Rohrschneider, M. Veto, R. Warden*

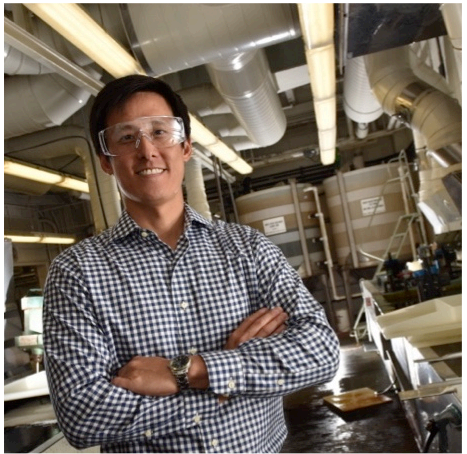

Ball Aerospace & Technologies Corp.

CIRiS addresses need for radiometrically calibrated infrared imagery, with short revisit times and high spatial resolution

- Especially for daily imagery over the globe, at spatial resolution << 1 km:
- For evapotranspiration measurement (evaporation + transpiration)
  - A key Earth Science variable
  - Data to guide irrigation sufficiency, prediction of sudden drought

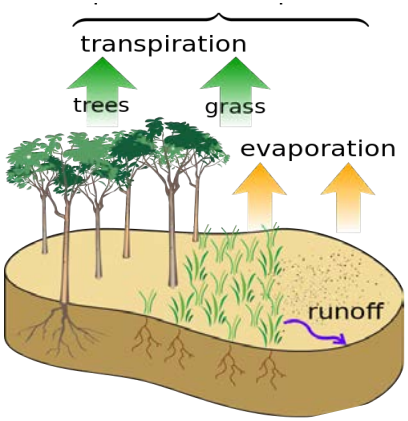

- To transfer radiometric calibration between other spaceborne infrared instruments
  - Resolve calibration differences due to instrumental and orbital effects
  - e.g., VIIRS, MODIS, AVHRR

- Also daily Land Surface and Sea Surface temperature measurements (LST, SST)

CIRiS is a compact, low size/weight/power instrument suitable for constellations of Cubesats or other spacecraft hosts

- Compact 20 x 20 x 10 cm^3 infrared imaging radiometer has been integrated to a 6U Cubesat
- Launched Dec 5, 2020 on a demonstration mission in LEO

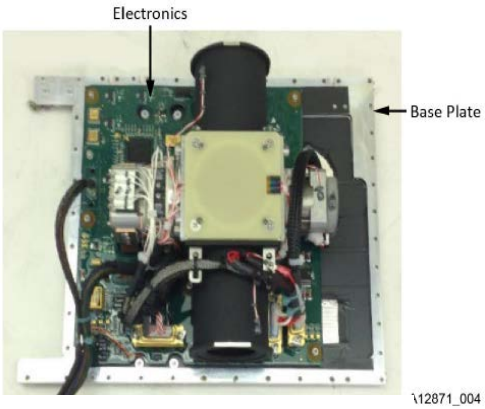

Goals of the mission:

1. Demonstrate technologies for high performance in small volume:
   - Uncooled microbolometer focal plane assembly in space
   - Flat-panel carbon nanotube calibration sources
2. Optimize calibration sequence for Cubesat operation
3. Optimize artifact suppression by algorithm

Instrument SWaP	Value
Size	< 20 x 20 x 10 cm^3
Weight	1.8 kg
Instrument power, including heaters (TVAC 10- min avg)	9.5 W

The CIRiS instrument comprises an optomechanical assembly and single electronics board (PWA)

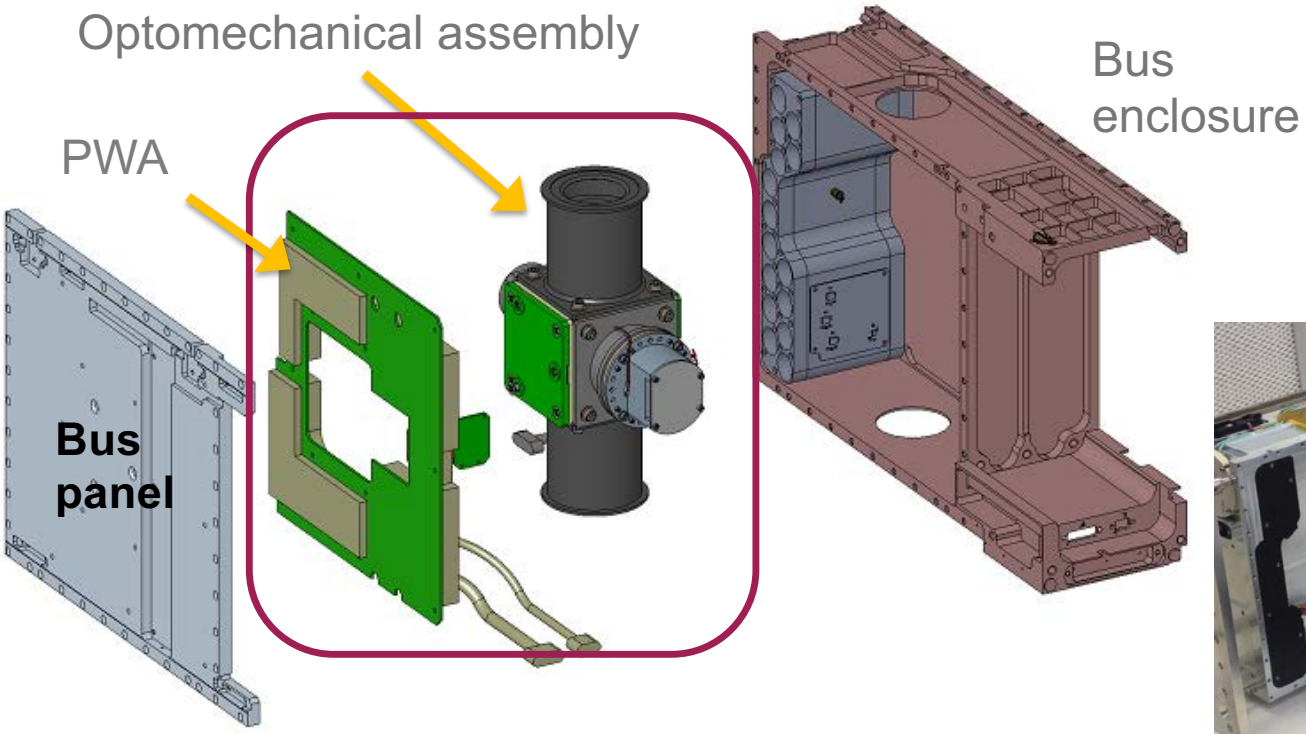

The objective of CIRiS system design is to optimize on-orbit calibration performance

- The CIRiS instrument as a “calibration laboratory in space”

- Three different calibration views on-orbit, via scene-select mirror
  - Two carbon nanotube calibration sources (different temperatures)
  - View to deep space

- Multiple parameters selectable on orbit
  - Calibration sequence, timing, temperatures, others

- Additional features to optimize calibration performance:

1. End-to- end calibration
2. Multiple temperature controlled zones
3. Multiple temperature sensors for background correction

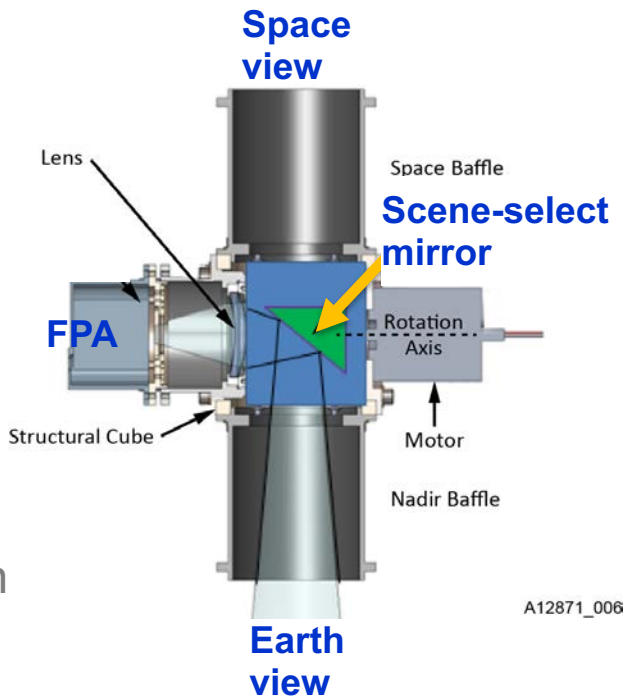

An enabling technology for high calibration performance in a small volume: flat-panel carbon nanotube calibration sources

- Carbon nanotube films on 1/8-in thick flat panel substrates
  - Fit two calibration sources in 10 cm length- difficult with conventional cavity sources

- High measured emissivity in CIRiS bands $\varepsilon > 0.996$
  - Reduces emissivity uncertainty in calibration
  - Reduces stray light reflections during calibration

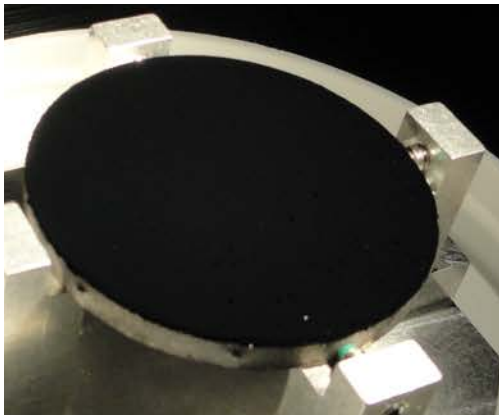

Carbon nanotube film on 1/8 in thick substrate

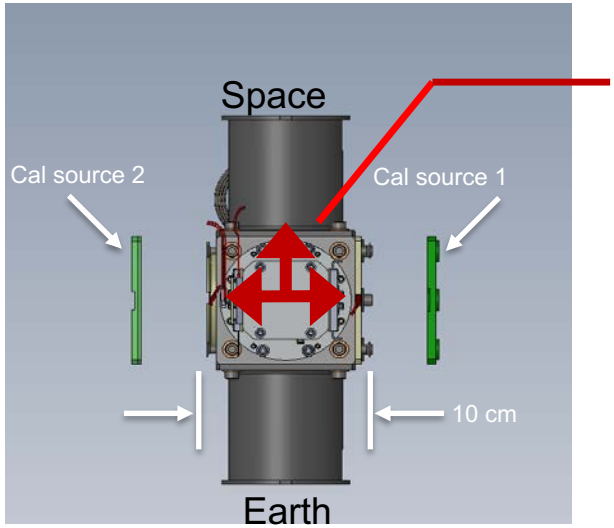

Two carbon nanotube sources fit within a 10 cm side space

CIRiS acquires calibrated images in three infrared bands

- Three bands selected for imagery of Earth's surface temperature
  - Two bands enable correction for atmospheric water absorption
- Parallel images acquired in each band from LEO by pushbroom scanning

Band	FWHM wavelengths Lower, upper
1	7.40 um, 13.72 um
2	9.85 um, 11.35 um
3	11.77 um, 12.60 um

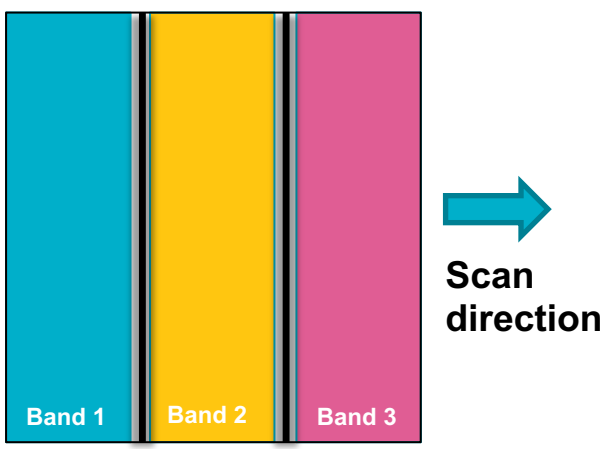

3 band filter over focal plane

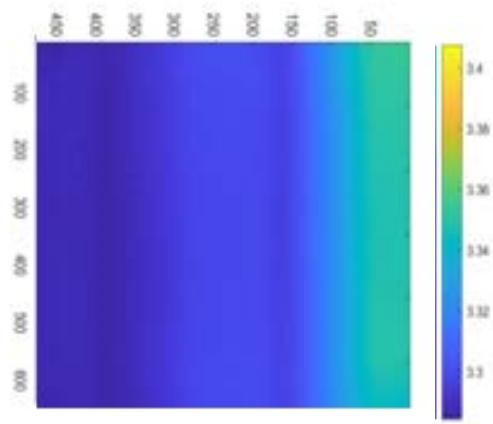

Image in 3 bands from flat field source

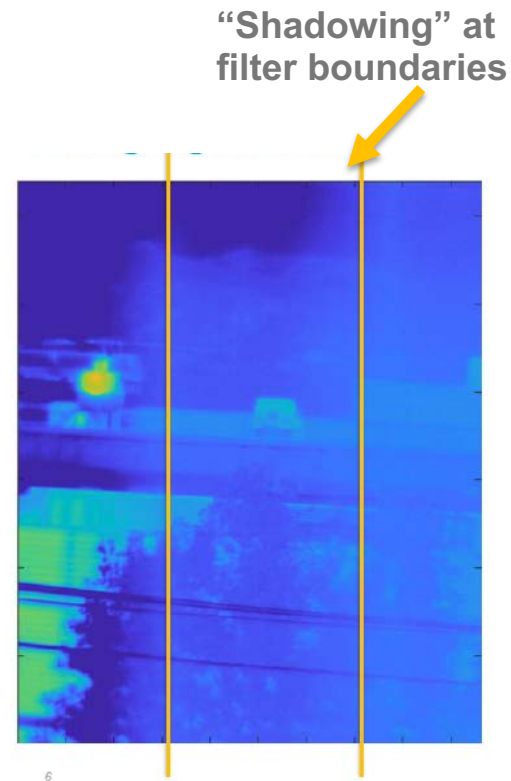

Image in 3 bands of parking structure

L-CIRiS deployed in Low Earth Orbit, after stay on International Space Station and transfer to higher orbit

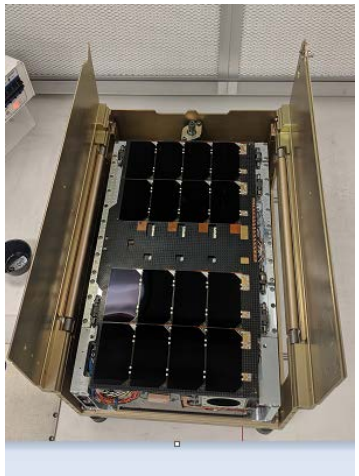

CIRiS/Cubesat bus in dispenser

Launch from Cape Canaveral to ISS on Falcon 9 launch vehicle

Departure from ISS to higher altitude, Cygnus vehicle

- CIRiS deployed in its final orbit on Feb 1, 2020
- Orbit is 52 deg inclination; ~470 km altitude

CIRiS Status on orbit

- Exercised subsystems: telemetry, focal plane, scene select mirror
- Scanned through three calibration views; imaged all cal views
- Taken first Earth images through science port
- Working to improve communication efficiency with spacecraft, especially dropped data

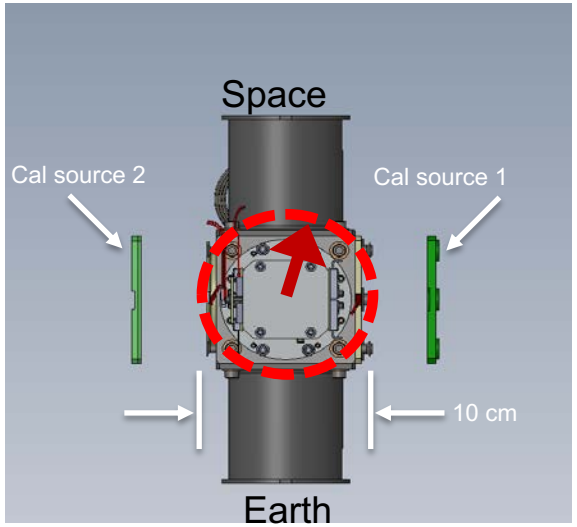

360 deg scan of CIRiS Field of View (no heat applied to cal source)

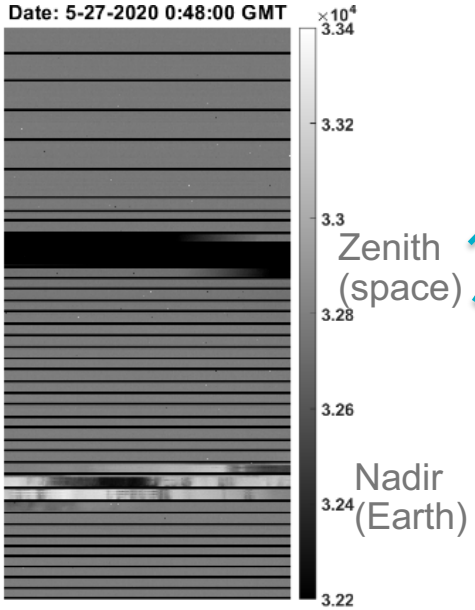

Coarse scan; images of subset of all FPA rows

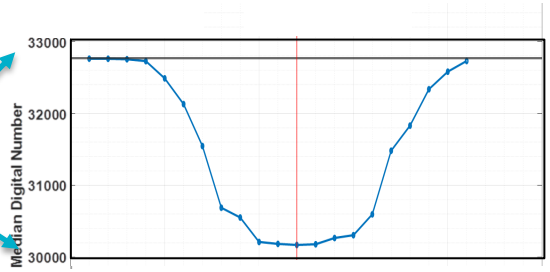

Fine scan, FPA median signal in Band 1 around deep space calibration view

First partial and full Earth images acquired

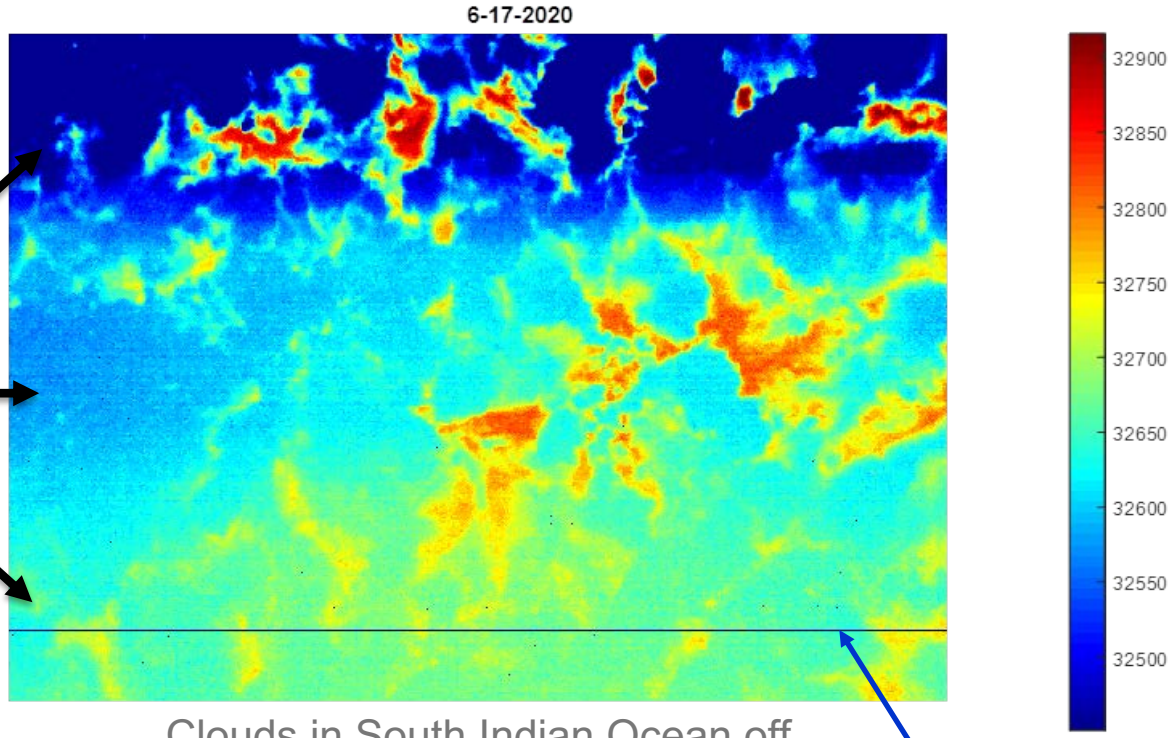

Band 1

Band 2

Band 3

Clouds in South Indian Ocean off Australian coast

One row of data dropped along data pipeline

Next Steps

- Complete commissioning of all instrument functions

- Characterize calibration performance
  - Absolute and relative accuracy, repeatablity, others
  - Identify error sources, factors affecting calibration
  - Calibration intercomparison between on-board cal sources
  - Co-add images for improved SNR

- Optimize calibration using characterization results

- Acquire calibrated Earth images
  - Views to vicarious ground sources
  - Characterize performance for applications-evapotranspiration, land and sea surface temperature, cloud radiance, others
  - Trending

Point designs developed for CIRiS constellations to support evapotranspiration, other missions, with daily global revisit times

Assumptions:

- Up to 12 spacecraft in same polar orbital plane
- Two CIRiS instruments per payload for 30 deg field of view
- Pushbroom scanning of Earth

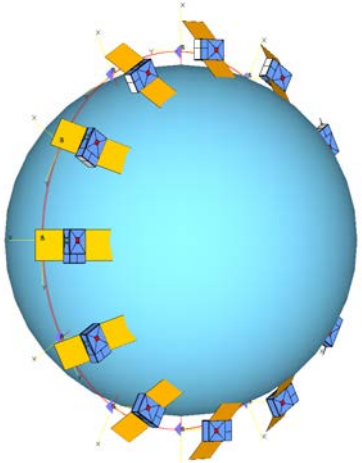

Number of spacecraft	Altitude (km)	Revisit Time (days)	Swath (km)	GSD (m)
3	485	4	254	201
4	460	3	241	191
6	410	2	215	170
8	625	1	336	259
9	550	1	296	228
10	490	1	263	203
11	440	1	236	182
12	400	1	209	166

Daily global revisit

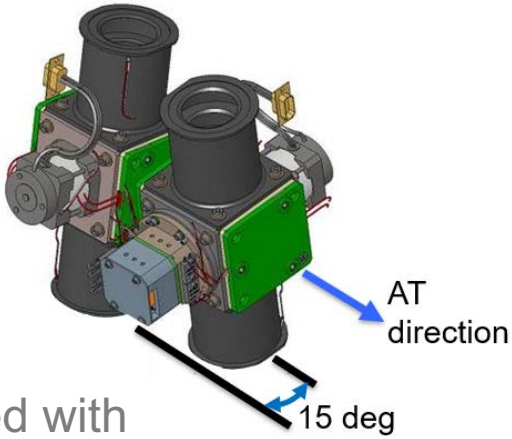

- Point designs also developed for CIRiS instrument modified with larger FPA (1920 x 1200 instead of 640 x 480)
  - Daily global revisit times feasible with spatial resolution < 70 m