Compact Fire Infrared Radiance Spectral Tracker (c-FIRST)

Sarath Gunapala, William Johnson, David Ting, Sir (Don) Rafol, Alexander Soibel, Perry Ramsey, Olga Kalashnikova, Michael Garay, Ashley Davies, Mehmet Ogut, Sam Keo, and Yuki Maruyama
Center for Infrared Photodetectors
Jet Propulsion Laboratory, California Institute of Technology

Christopher David, Michael Kelly, and and Justin Baker
Anduril Industries, Inc.

Ashok Sood and John Zeller
Magnolia Optical Technologies, Inc.

Sachidananda Babu and Parminder Ghuman
NASA Earth Science Technology Office

Sponsors: NASA ESTO's ACT, SLI-T, InVEST, and IIP programs

Wild Fire & Volcanic Eruption

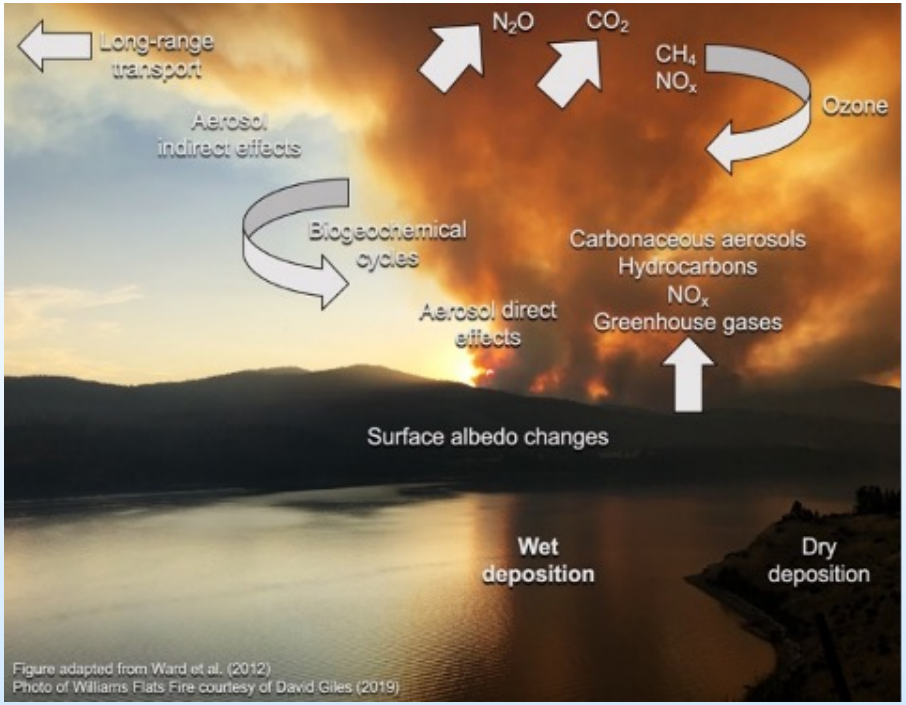

Figure adapted from Ward et al. (2012)
Photo of Williams Flats Fire courtesy of David Giles (2019)

The Dixie Fire was an enormous wildfire in California in 2021. It burned 963,309 acres before being 100% contained after 4 months. It was the largest single wildfire in recorded US history, and the second-largest wildfire overall. This fire completely destroyed several small towns, burning an area larger than the state of Rhode Island. Smoke from the Dixie Fire caused unhealthy air quality across the Western United States, including states as far east as Utah and Colorado. The Dixie Fire was the most expensive wildfire in United States history, costing $637.4 million to fight.

Hot Target Detection Requirements (Cont.)

- Instruments on polar-orbiting platforms provide some additional wavelengths, but there are issues with saturation of the MWIR bands for extremely hot targets.

Flaming fire as seen with a visible camera

Fire behind JPL in 2011 as seen with a MWIR T2SLS camera

JPL Barrier Infrared Detector (BIRD) Technology

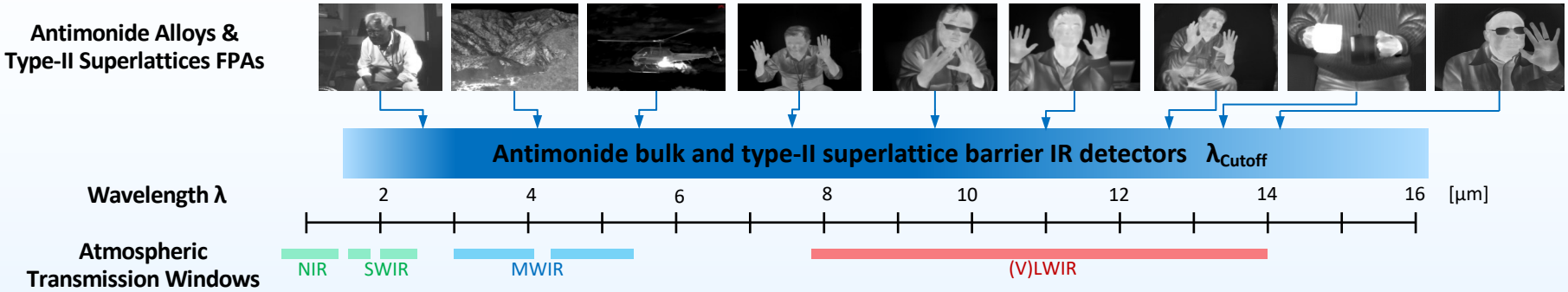

- III-V semiconductor FPAs have superior operability, spatial uniformity, temporal stability, affordability … ("ility" advantages)
  - But traditional bulk III-V semiconductor FPA have very limited cutoff wavelength adjustability: InSb (~5.3 μm), InGaAs (~1.7 – 2.3 μm)
- JPL antimonide alloy and type-II superlattice barrier infrared detectors (BIRDs)
  - Versatility – Continuously adjustable cutoff wavelength, from SWIR to VLWIR
  - Retains III-V semiconductor 'ility' advantages
  - MWIR: High operating temperature (HOT) BIRD has demonstrated a 40-50 K operating temperature advantage over InSb (market-leading MWIR FPA). Licensed /produced by leading US commercial FPA company. Poised to replace InSb for most applications.
  - (V)LWIR: Ongoing technology development for performance improvement

MWIR InAs/InAsSb T2SLS High Operating Temperature Barrier IR Detector (HOT-BIRD)

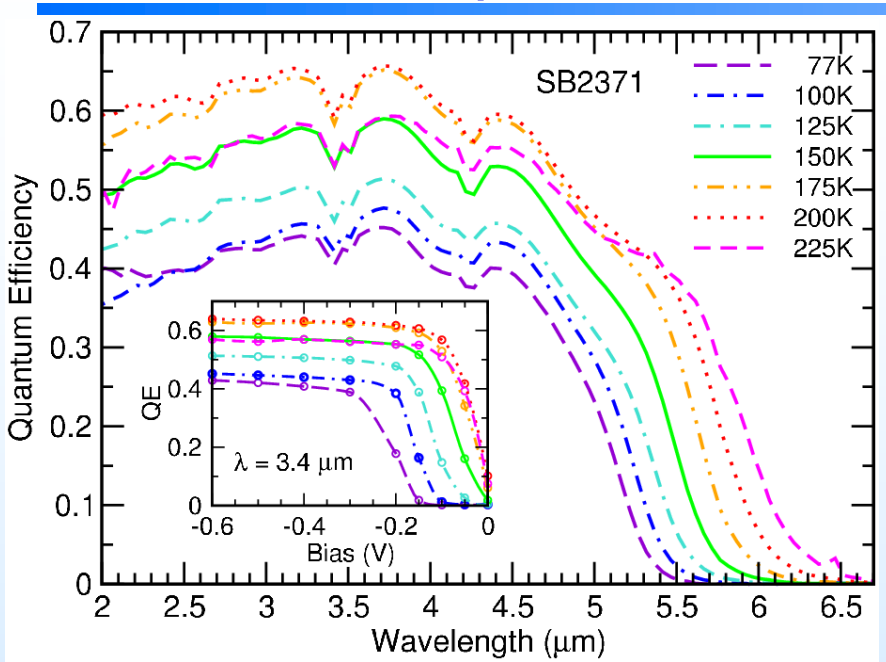

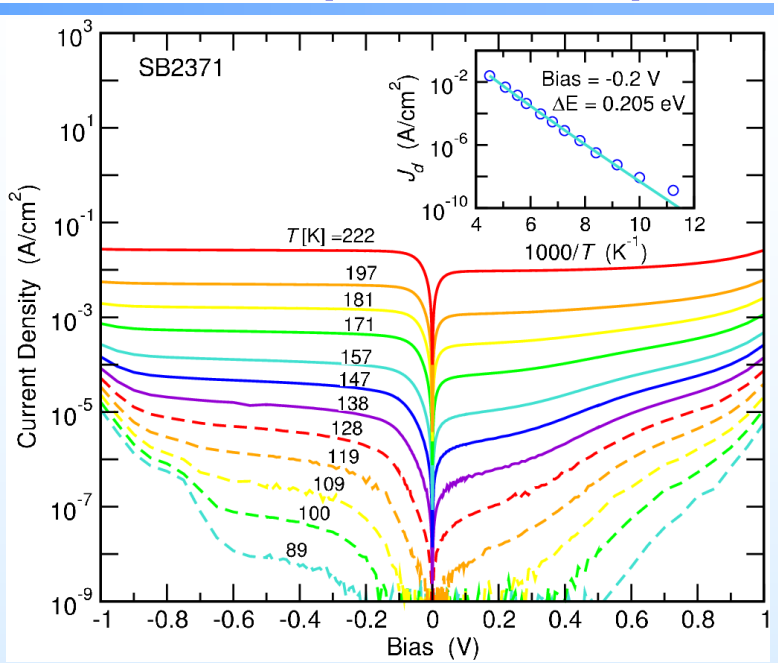

- MWIR nBn detector with InAs/InAsSb T2SLS absorber
- Cutoff wavelength: 5.07 μm (77 K), 5.77 μm (225 K)
- QE(4.3 μm, 150K)=52% – No A/R coating
- J_{dark}(-0.2V, 157K)=9.6×10^{-5} A/cm^2 (~4.5X Rule'07)
- Arrhenius analysis (109 K to 222 K):
  - Activation energy ΔE = 0.205 eV ; Eg(157 K) ~0.229 eV.

"**B**arrier **I**nfra**R**ed **D**etectors", D. Z. Ting, A. Khoshakhlagh, A. Soibel, Cory J. Hill, and S. D. Gunapala, U. S. Patent No. 8,217,480 (2012)

Digital Read Out Integrated Circuits (DROICs)

Analog ROIC

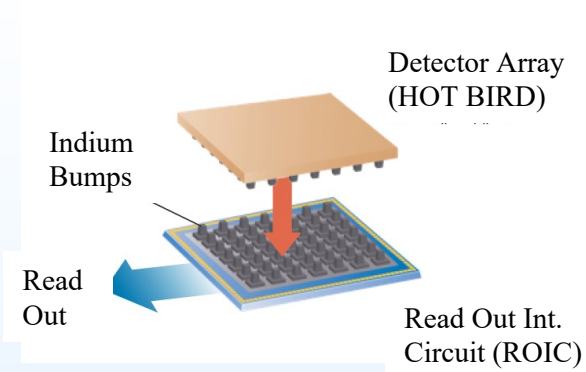

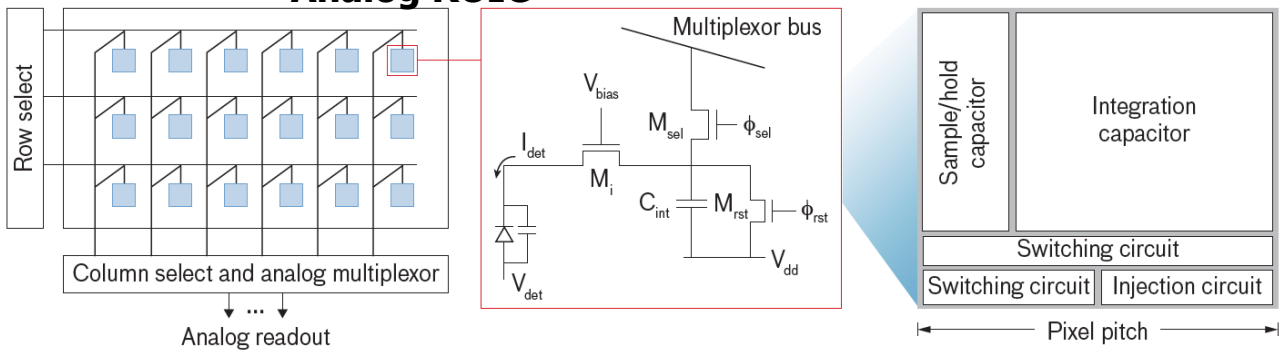

Digital ROIC

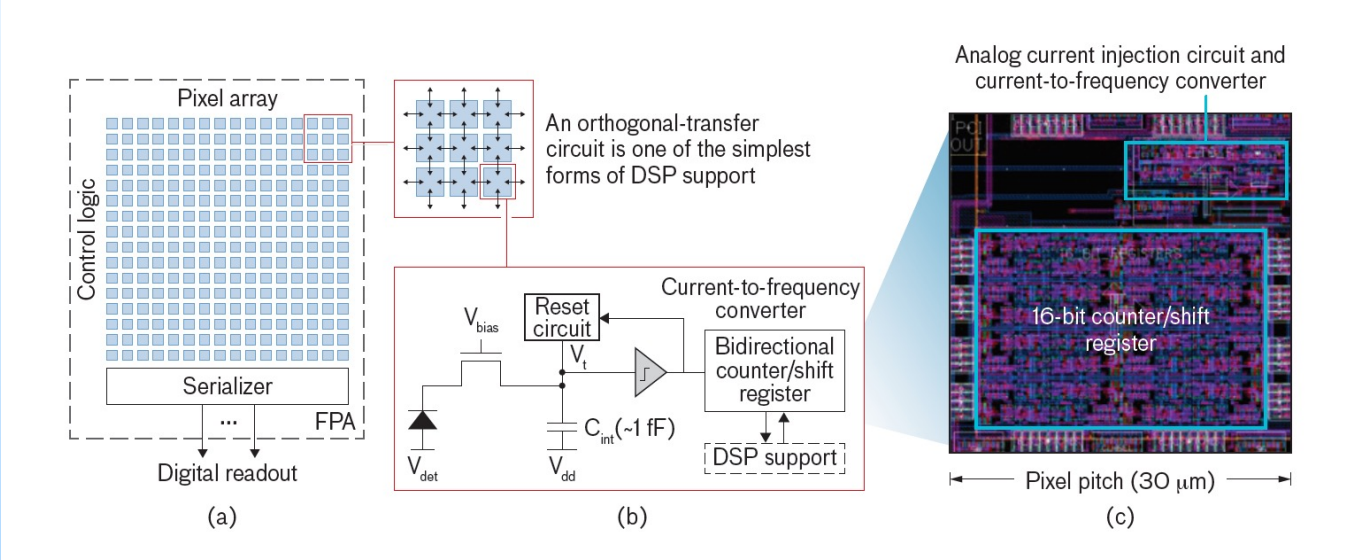

1. "Design and Testing of an All-Digital Readout Integrated Circuit for Infrared Focal Plane Arrays", M. W. Kelly, et al., Proc. SPIE, 5902, (2005).
2. "A new digital readout integrated circuit (DROIC) with pixel parallel A/D conversion and reduced quantization noise", Hüseyin Kayahan ⇑, Melik Yazici, mer Ceylan, and Yasar Gurbuz, Infrared Physics & Technology 63 (2014) 125–132, http://dx.doi.org/10.1016/j.infrared.2013.12.013

Initial 200K Imaging Results

Digital ROIC. λ_{cutoff} (150K) ~ 4.3 μm

t_{integ} ~ 10 ms

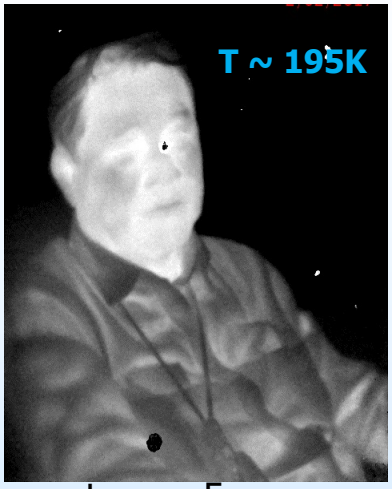

t_{integ} ~ 5 ms

t_{integ} ~ 2 ms

- Encouraging initial 200K imaging results.
- Work in progress
- Un-optimized FPA operating conditions
- Long integration times (better S/N) at 200K made possible by DROIC
  - Two-point correction not possible w/ analog ROIC

Analog ROIC. λ_{cutoff} (150K) ~ 5.8 μm

t_{integ} ~ 6.7 ms

t_{integ} ~ 0.14 ms

- Comparison to FPA w/ conventional analog ROIC
  - Longer cutoff material designed for other applications. Higher dark current at high T.
- Much shorter integrations times at higher T
  - 130K, 6.7 ms intg time, 2-point correction
  - 184K, 0.14 ms intg time, 1-point correction
    - Image would improve with DROIC

Current Remote Sensing Wildfires

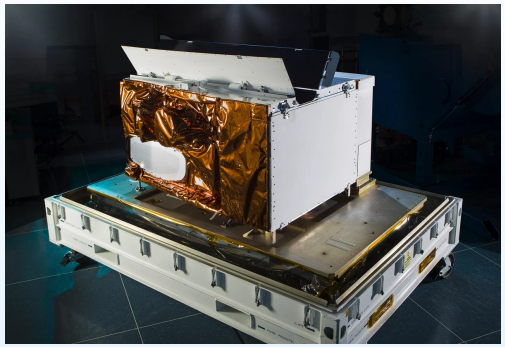

Visible Infrared Imaging Radiometer Suite (VIIRS)

Source: NOAA

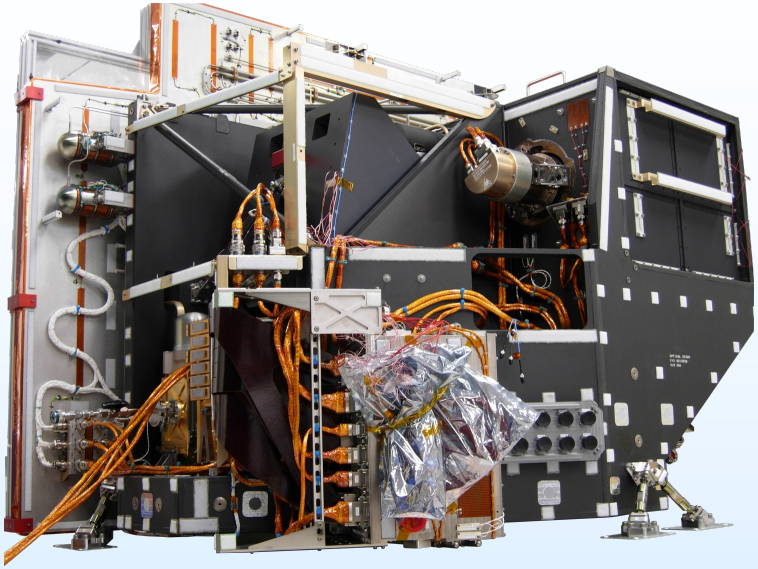

GOES-R Advanced Baseline Imager (ABI)

Source: NASA/NOAA

Swath width - 3060km
Orbit – Polar at altitude of 829km
Spatial resolution (GSD) – 750m
Spectral bands – 22 (Vis, MWIR, LWIR)
Power – 200W
Weight – 275Kg
Global coverage – 14 Hours
Repeat cycle – 16 days

Orbit – Geo stationary
Spatial resolution (GSD) – 1Km & 2Km
Spectral bands – 16 (Vis, MWIR, LWIR)
Continental US coverage – 5 Min
Hemisphere coverage – 15 minutes

Hot Target Detection Requirements

- Due to the wide range of scales involved, to understand the diverse effects of fires in the Earth system requires routine global monitoring only possible from satellites.
- The physics of the retrieval of thermal energetics for these types of hot targets requires sensitivity at multiple wavelengths in the SWIR to MWIR to allow fitting to the Planck blackbody emission curve.
- As per current Earth Science Decadal Survey, for target identification and geolocation, fine spatial resolution (30 – 60 m) is required, due to the presence of materials at different temperatures within the area of a single image pixel.
- Currently, no instrument is able to cover the entire dynamic range of fires that are present in the Earth system, leading to biases in our understanding of the fire occurrence frequency on the ends of the size/temperature spectrum.

Artist rendering of a fire detection satellite on orbit

Compact Fire Infrared Radiance Spectral Tracker (c-FIRST)

Jet Propulsion Laboratory
California Institute of Technology

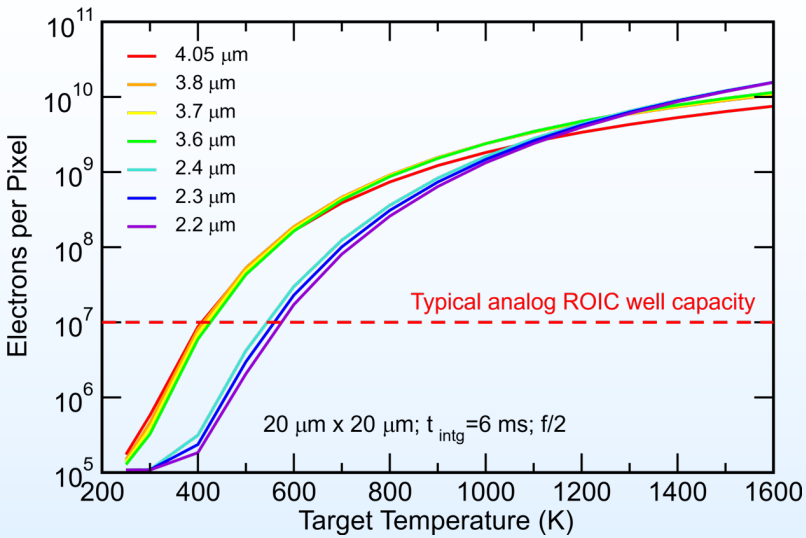

Digital-FPA Performance on HOT Targets

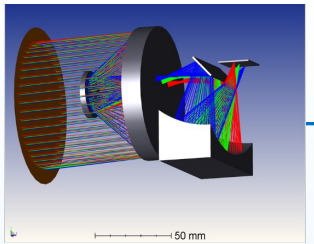

Off-Axis All Metal Korsch Optical Design

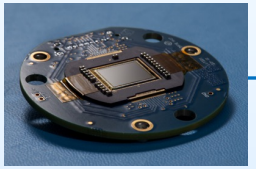

High Dynamic Range Digital FPA

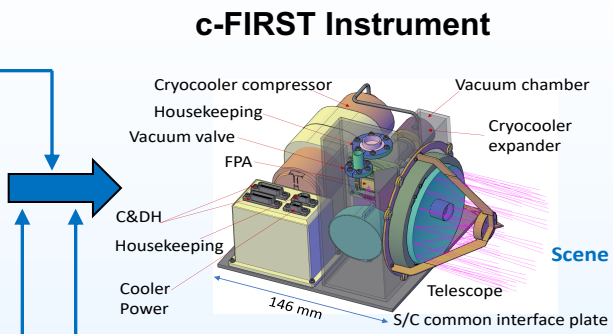

Qualcomm Snapdragon 855 board

Science and Societal benefits

- Detect small fires with good geolocation and large fires without saturating the instrument
- Quantify the flow of carbon in terrestrial ecosystems.
- Discover cascading perturbations in ecosystems related to carbon storage.
- Understand ecosystem response to fire events.
- Understand how the threat of wildfires is changing with time and how exposure to emissions from wildfires can affect human health.

c-FIRST Instrument

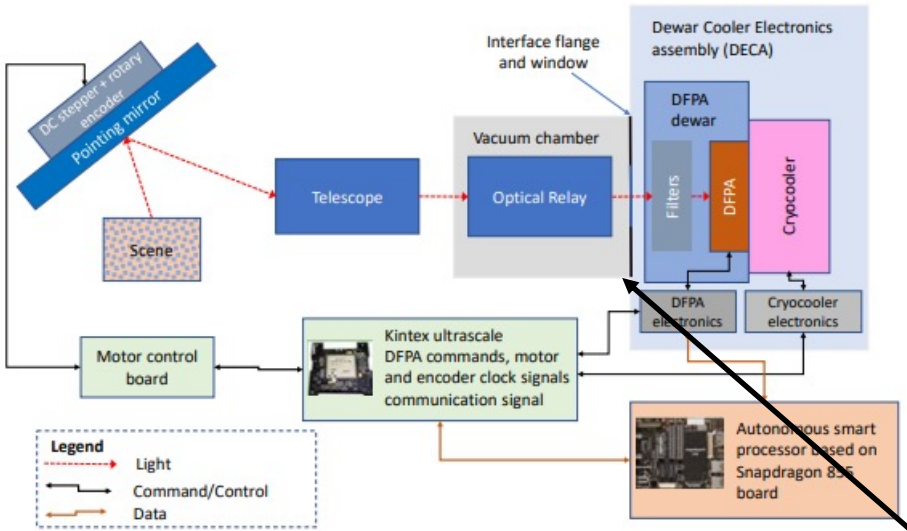

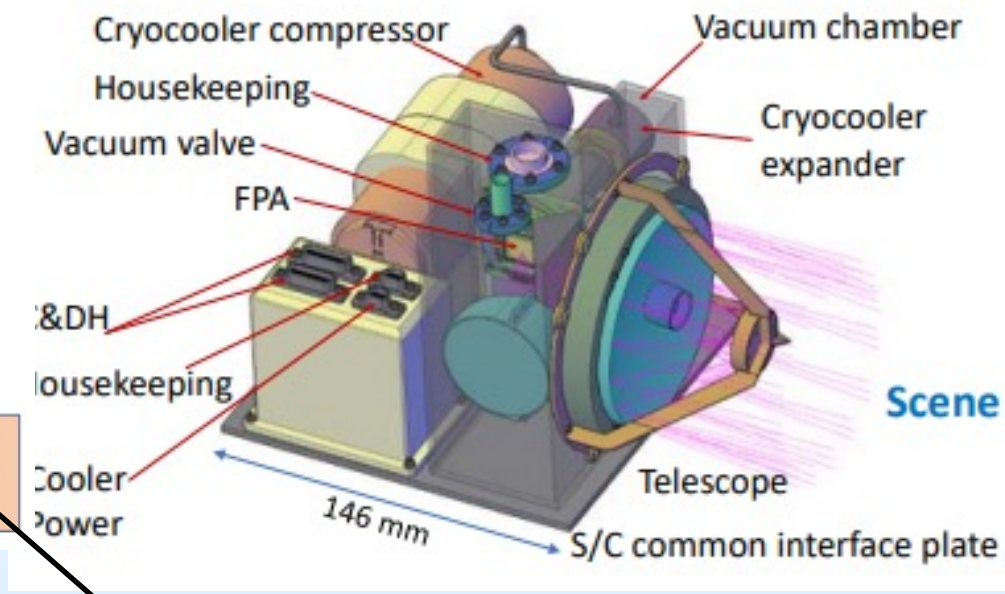

Weight	- <10Kg
Power	- 40W
FPA	- 1280x480 T2SLS
Pixel	- 20μm
Aperture	- 80mm
GSD	- 50m
Detectable Temp.	- 300 to >1600K
Cross track	- 64Km
Spectral bands	- 5
FPA operating Temp.	- 120K
Frame rate	- 140Hz
NEDT	- <0.7K
FOV	- 7.3 degrees
Wavelengths	- 1.61, 2.24, 3.74, 3.9, 4.05

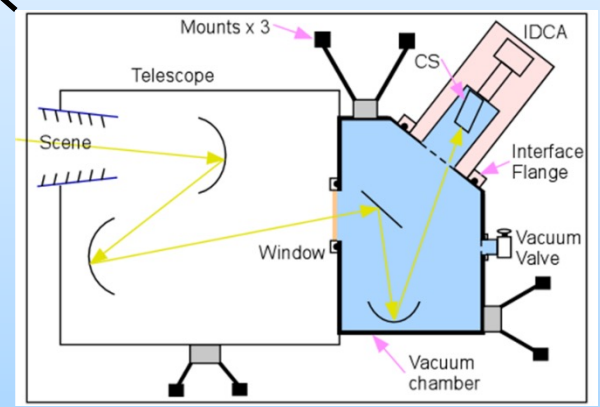

c-FIRST Optics Chamber

FPA for the c-FIRST EM (Airbourne) Instrument

Jet Propulsion Laboratory
California Institute of Technology

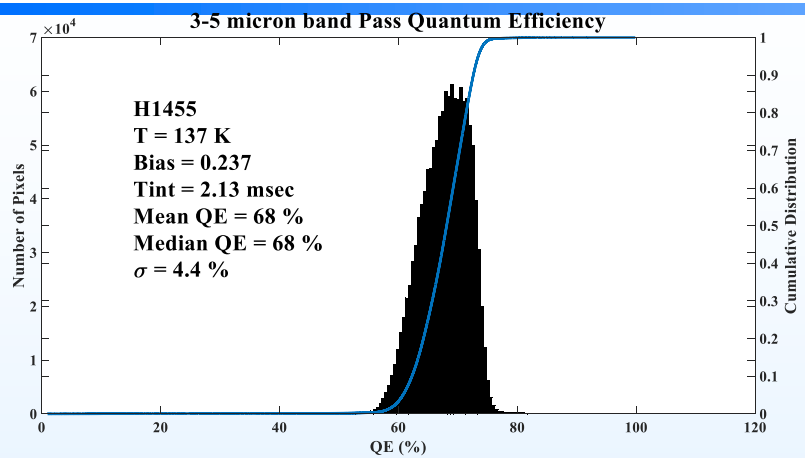

QE 68% without A/R coat

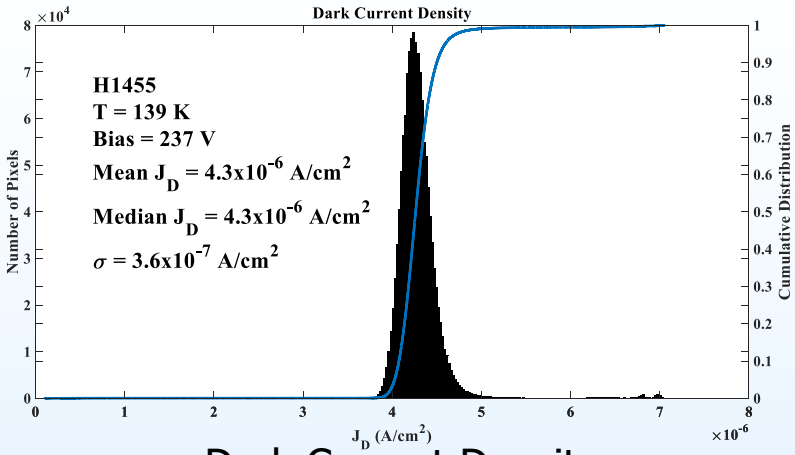

Dark Current Density

- FPA shows **significantly higher operating temperature than InSb**
  - FLIR ISC 1308 ROIC: 12-µm pitch, 1280x1024 pixel format
  - 140K QE outliers 1886; pixel operability for f/2, 300K BG 99.9%

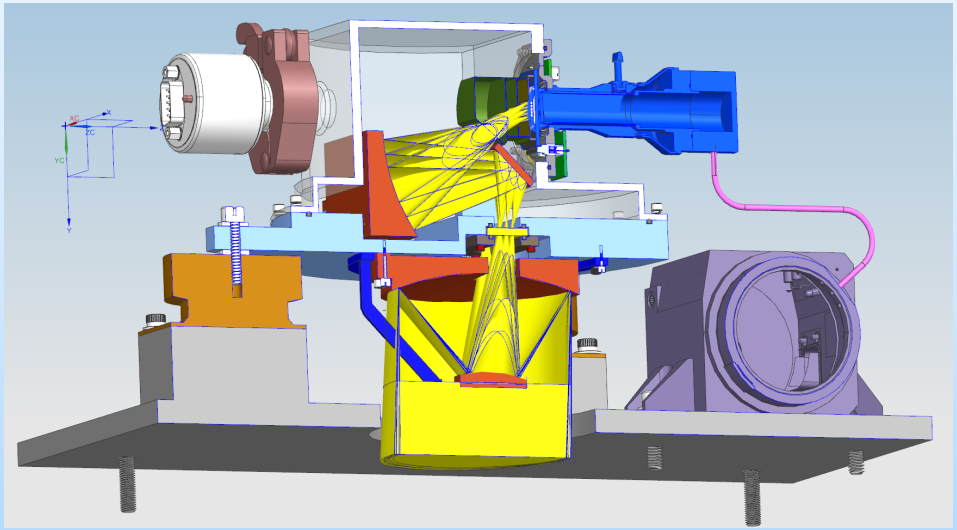

Overall Design (Current State)

HOT-BIRD: "Mid-wavelength **h**igh **o**perating **t**emperature **b**arrier **i**nfra**r**ed **d**etector and focal plane array", D. Z. Ting, A. Soibel, A. Khoshakhlagh, S. B. Rafol, S. A. Keo, L. Höglund, A. M. Fisher, E. M. Luong, and S. D. Gunapala, *Appl. Phys. Lett.* **113** , 021101 (2018). doi: 10.1063/1.5033338

Summary

- Recent advances in T2SLS Barrier IR Detector (BIRD) & digital-ROIC are technologies breakthroughs
  - Elevated the FPA operating temperature, good uniformity & operability, and good manufacturability, broadband
  - 32 bit high dynamic range; unsaturable for fires in Earth system
  - c-FIRST instrument airborne test - Q3 of 2024
- c-FIRST FM instrument is based on MWIR digital-FPA technology
- c-FIRST FM instrument
  - Size – 8-12U
  - Weight - <10Kg
  - Power – 40W
  - GSD – 50m
  - Cross track – 64Km

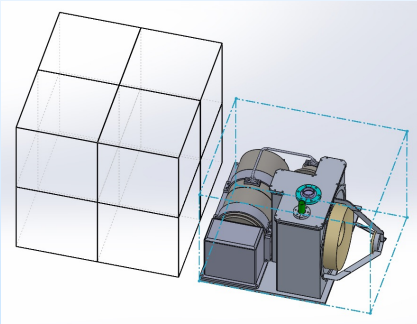

Initial design of c-FIRST

- Current TRL of c-FIRST is TRL-3; ends with TRL- 6
- c-FIRST will be able to cover the entire dynamic range of fires in the Earth system without pixel saturation

This work is sponsored by NASA ESTO under ACT, SLI-T InVEST, & IIP programs