Seasonal snow observations with Wideband Autocorrelation Radiometry during Winter 2018-19

Roger De Roo,
Mohammad Mousavi,
Anthony W. England,
and Line van Nieuwstadt

A project enabled by
NASA ESTO Contract NNX17AD66G
and NASA THP Contract 80NSSC18K0981

Motivation

- Snow on the ground is a major source of fresh water around the globe
- Seasonal snow packs are changing with the climate
- Wideband Autocorrelation Radiometry (WiBAR) is
  - Microwave, and thus has all weather capability
  - Passive, and thus is relatively low power
  - Sensitive to layered structures,
    and thus responds to snow depth, and not much else.

MICHIGAN ENGINEERING
UNIVERSITY OF MICHIGAN

NASA

Roadmap

- WiBAR theory of operation
- WiBAR instruments for snow packs
- 2018-19 experimental set-up
- Measurement results
- Conclusions

MICHIGAN ENGINEERING
UNIVERSITY OF MICHIGAN

WiBAR physics

- Passive microwave measurement of the electrical distance b/t two interfaces
- Geophysical applications: lake ice and dry snow pack

Integrated time delay:

$$\tau_{delay} = \frac{2}{c}\int_0^{SD} \sqrt{n_p^2(z) - \sin^2\vartheta}\ dz$$

If snow density is constant:

$$\tau_{delay} = \frac{2}{c} SD\sqrt{n^2 - \sin^2\vartheta}$$

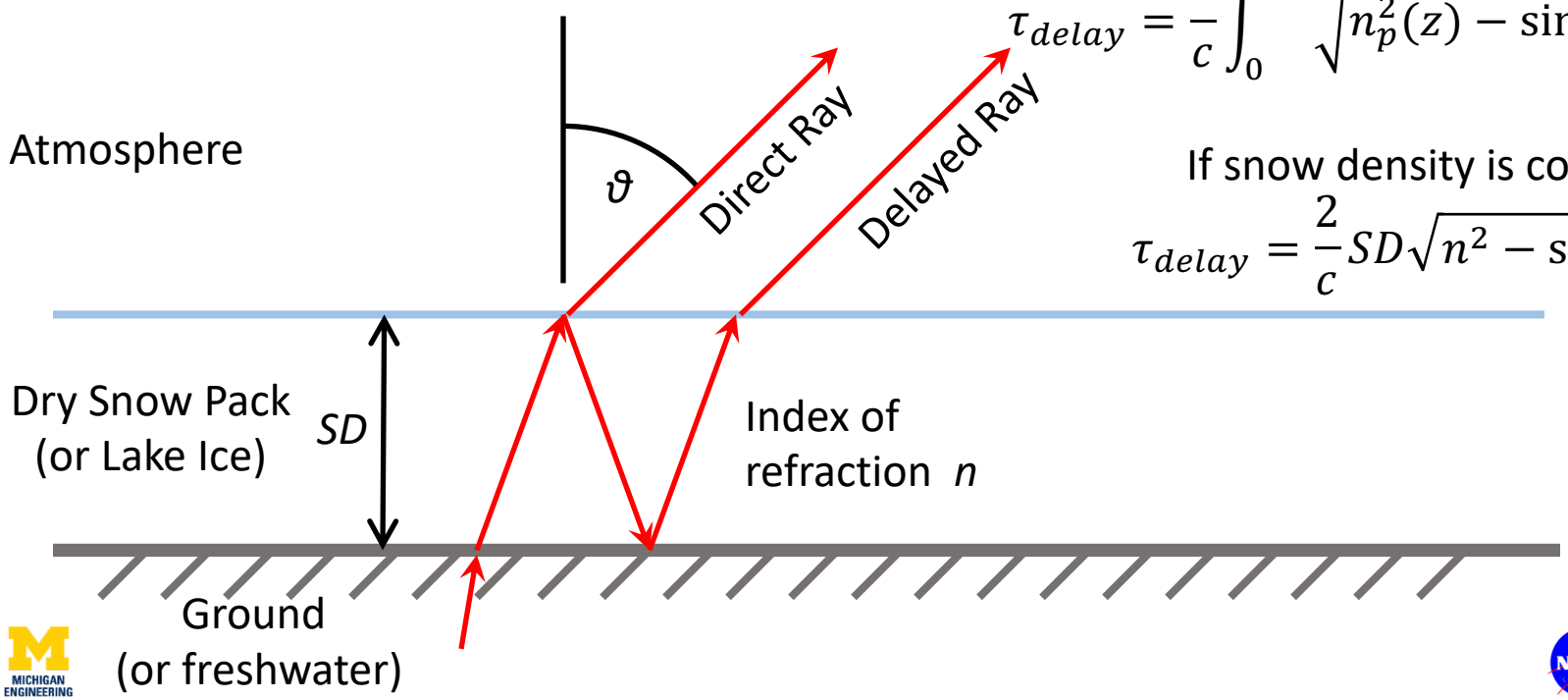

WiBAR measurement approach: spectrum analysis

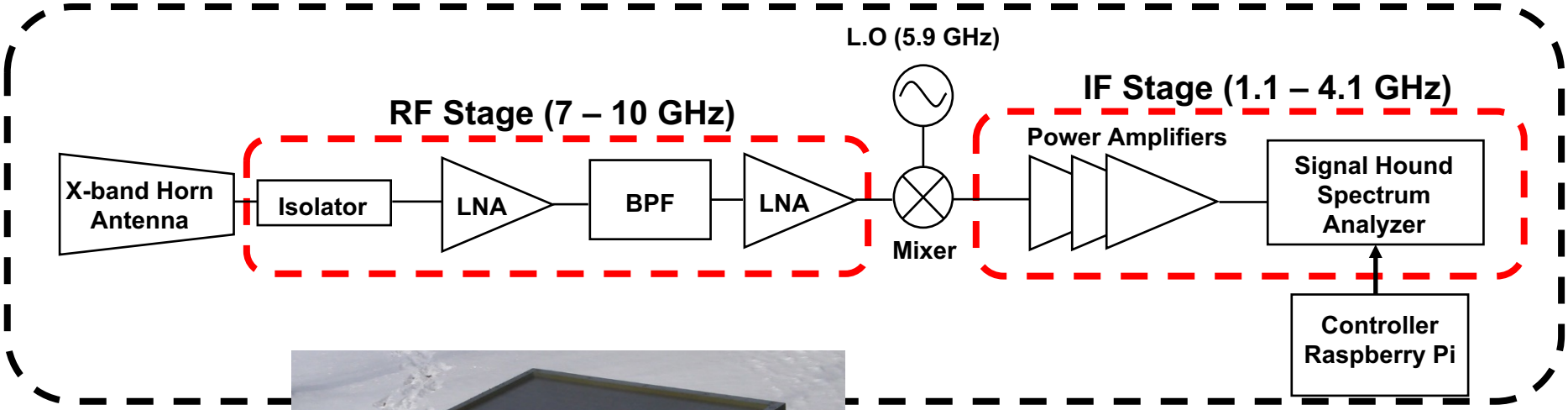

Our X-band WiBAR for lake ice

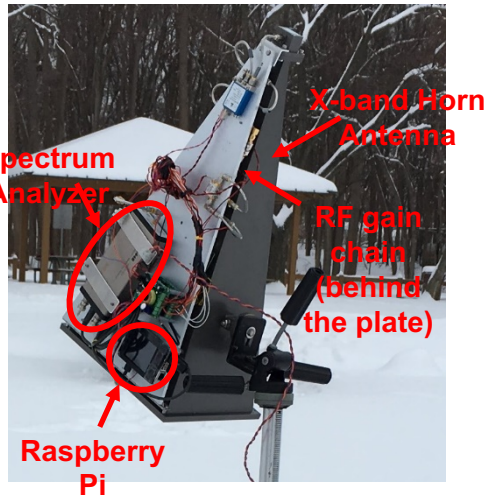

WiBAR Measurement: the Frequency Spectrum

- The received power, P, at the spectrum analyzer:

$$P(f) = KT_{sys}(f)\, B\, G(f) = K\left(e(f)T_0 + T_{REC}(f)\right) B\, G(f)$$

$\boldsymbol{K}$: Boltzmann's constant
$\boldsymbol{T_{SYS}(f)}$: radiometer system temperature
$\boldsymbol{G(f)}$: radiometer's gain
$\boldsymbol{T_{REC}(f)}$: receiver noise temperature
$\boldsymbol{T_0}$: physical temperature of the target

- Calibration:

$$\hat{e}(f) = \frac{P_{pack}(f) - P_{sky}(f)}{P_{Matched\ Load}(f) - P_{sky}(f)}$$

Power Spectrum

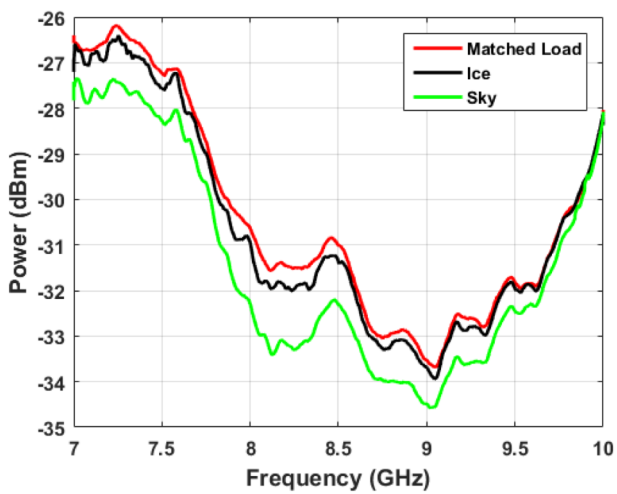

Emissivity

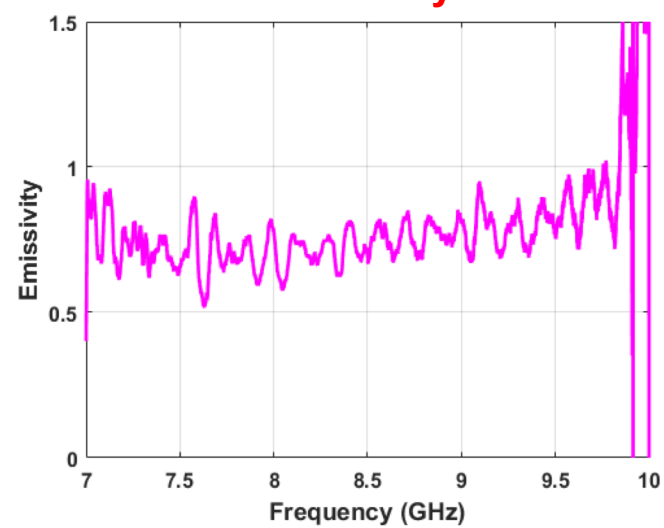

Lake icepack measurement at $\boldsymbol{\theta_0 = 3^o}$
South Sturgeon Lake, MN; 2018 Mar 07

WiBAR Measurement: the Autocorrelation Function

- Using the Wiener Khinchin theorem, the autocorrelation function, $\Phi(f)$, is:

$$\Phi(\tau) = \int_f e(f) w(f) e^{-j2\pi f \tau} \, df$$

$w(f)$: window function

Emissivity

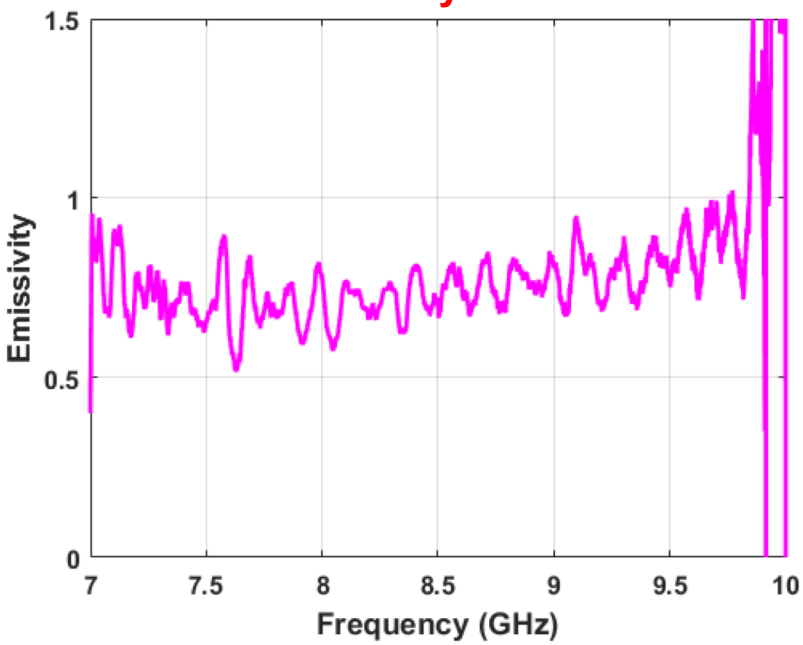

Autocorrelation Function

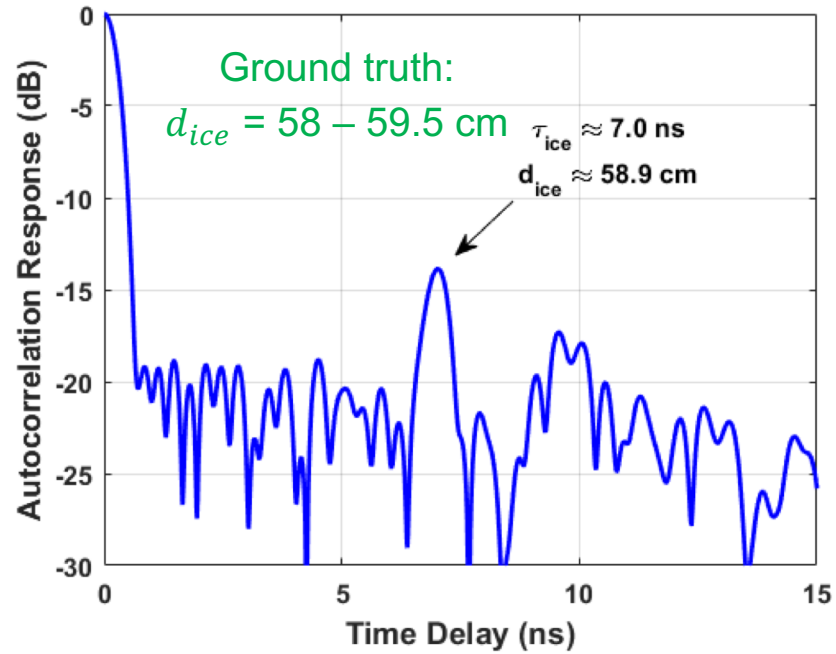

The signal is zero padded and a Hamming window is used for $w(f)$.
South Sturgeon Lake, MN; $\theta_0 = 3^o$; 2018 Mar 07

Time Lag Angular Dependence

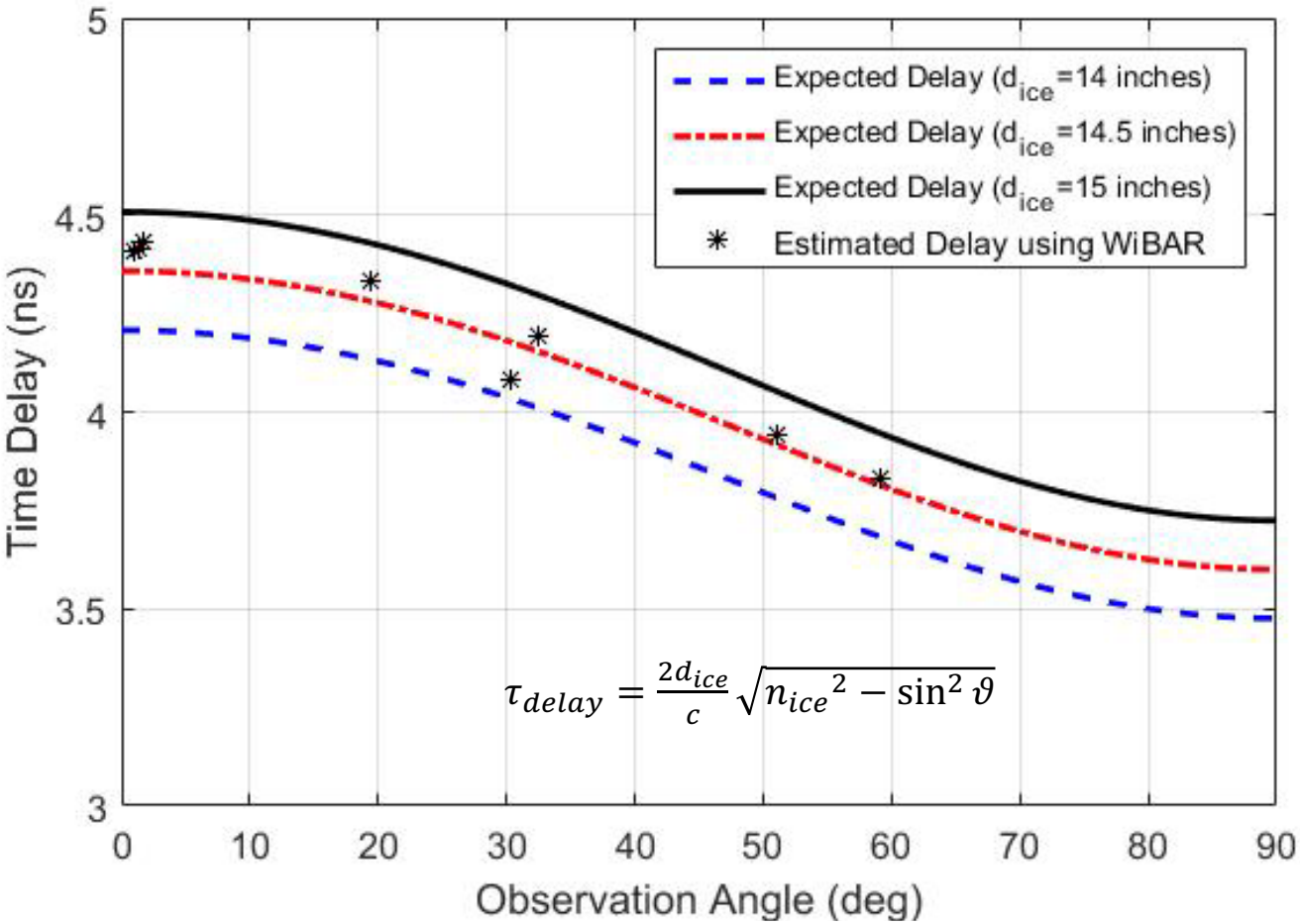

Measurements from Douglas Lake, MI; 2016 Mar 03. Ground truth of 14" thickness from augered hole.

$\tau_{delay} \downarrow$ as $\vartheta \uparrow$ is a signature of a single-layered emitter.

Lake Ice Measurements

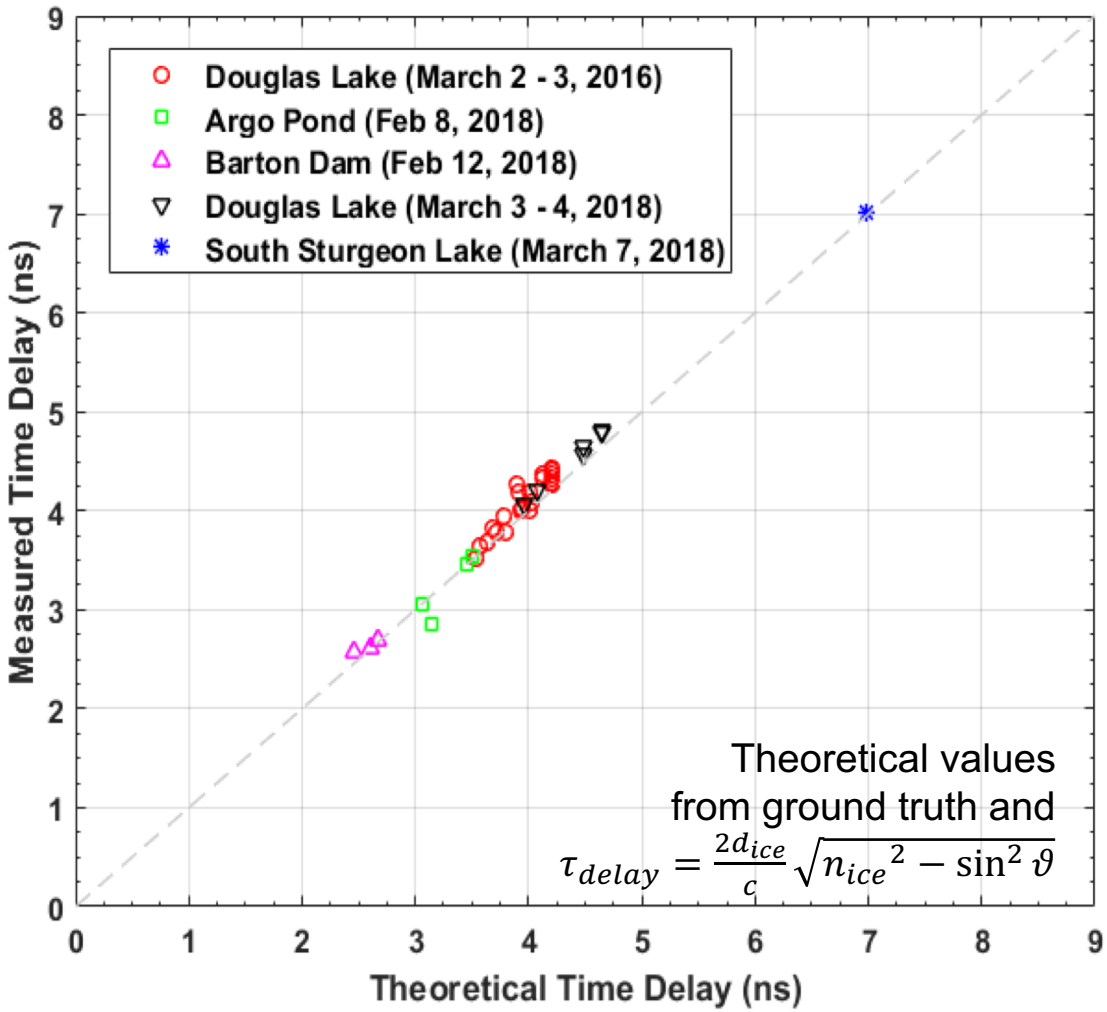

Coherence Reducers

Effects of surface roughness, volume scattering, and finite beamwidth wrt incidence angle on the peak of the ACF at the desired lag, τ_{ice}

$$ACF(\tau) = FFT^{-1}\big(e(\omega)\big)$$

$$e(\omega) = e_{no\ lag} + 2e_{ice}\cos\omega\tau_{delay}$$

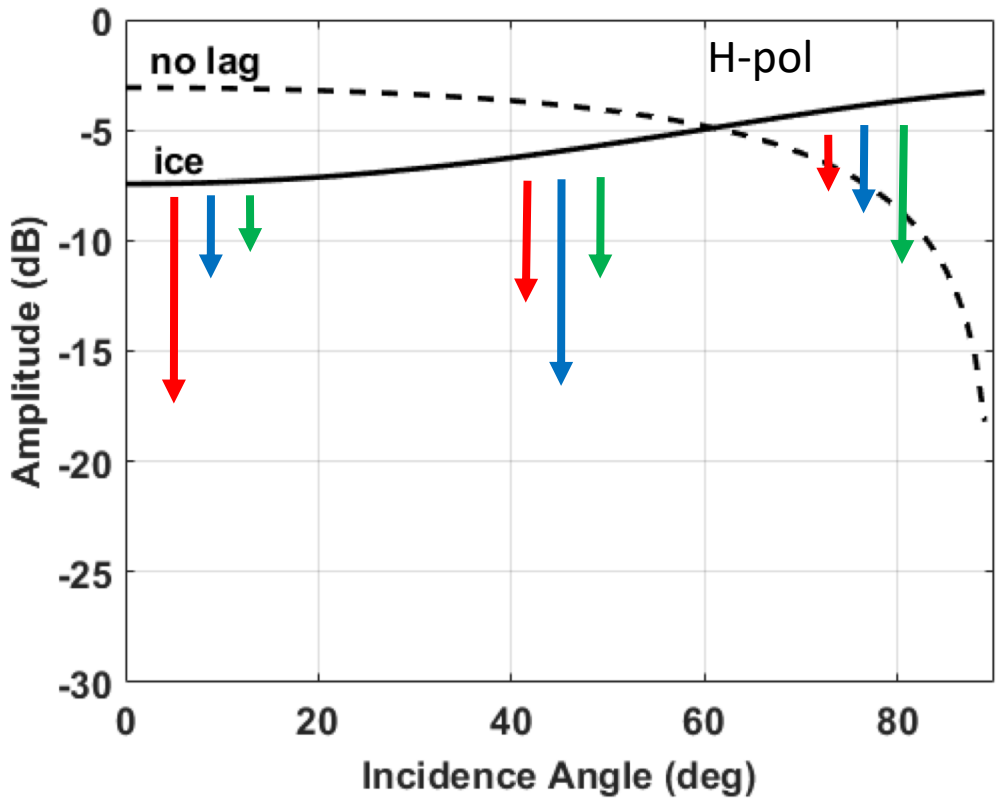

$e_{no\ lag}$ is proportional to ACF at $\tau=0$

e_{ice} is proportional to ACF at $\tau=\tau_{delay}$

Surface Roughness appears to be the largest coherence reducer for thin layers.
$ACF(\tau_{delay})\uparrow$ as $\vartheta\uparrow$ is a signature of a thin layered emitter.

Snow WiBAR measurement: long wavelength & large bandwidth

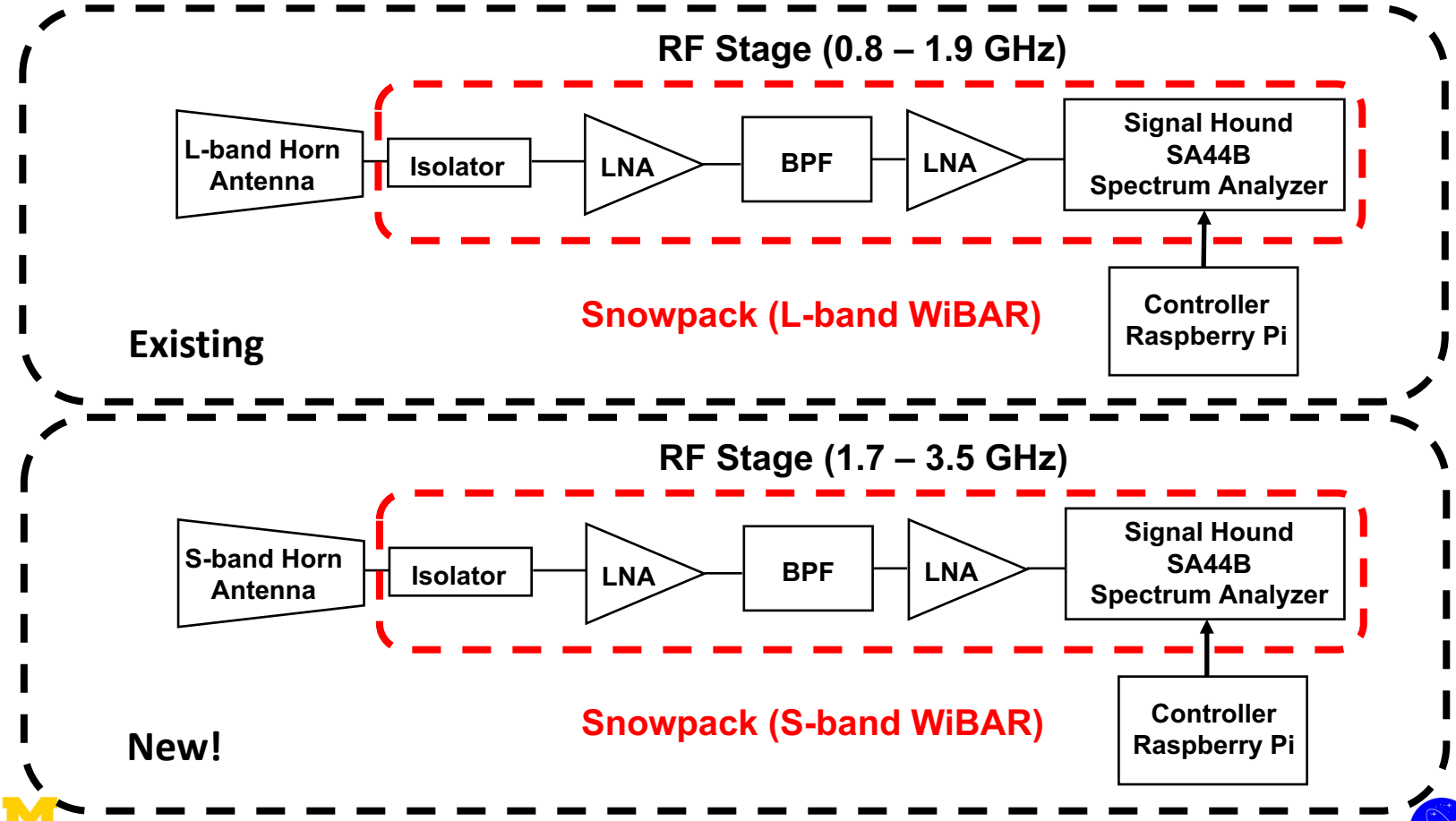

L-band WiBAR hardware

Thermoelectric cooler
(not implemented)

RF electronics

Horn antenna throat

C&DH electronics
(hidden from view)

Internet hardware

Video camera

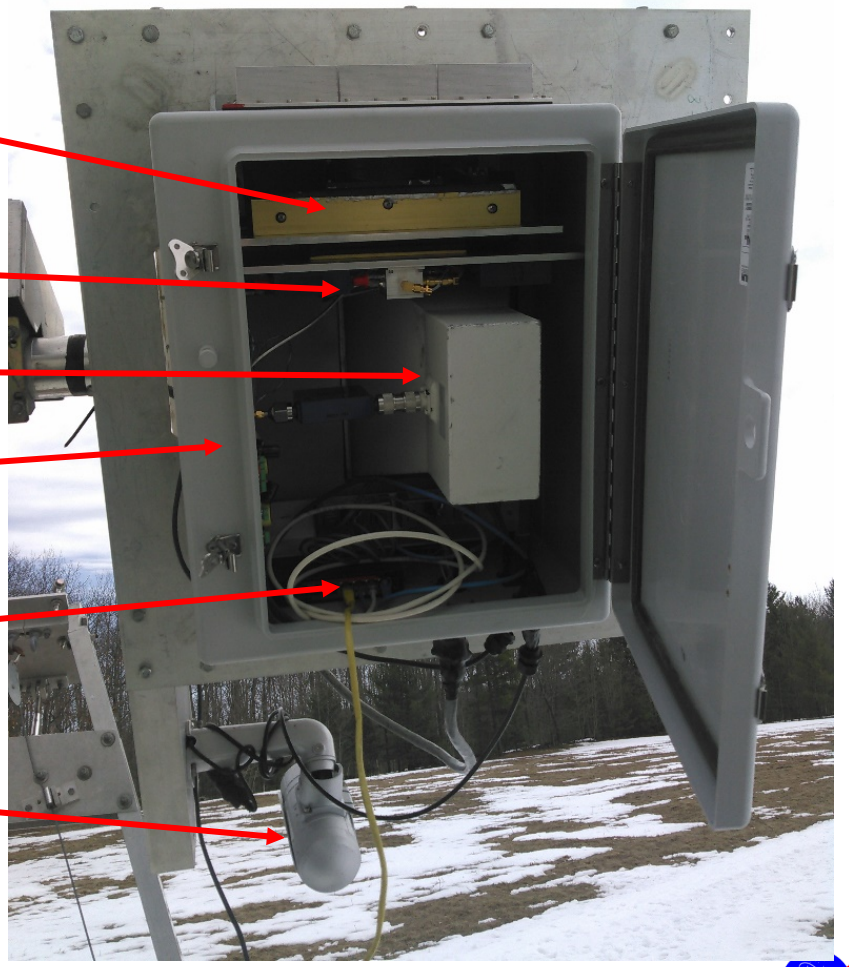

S-band WiBAR hardware

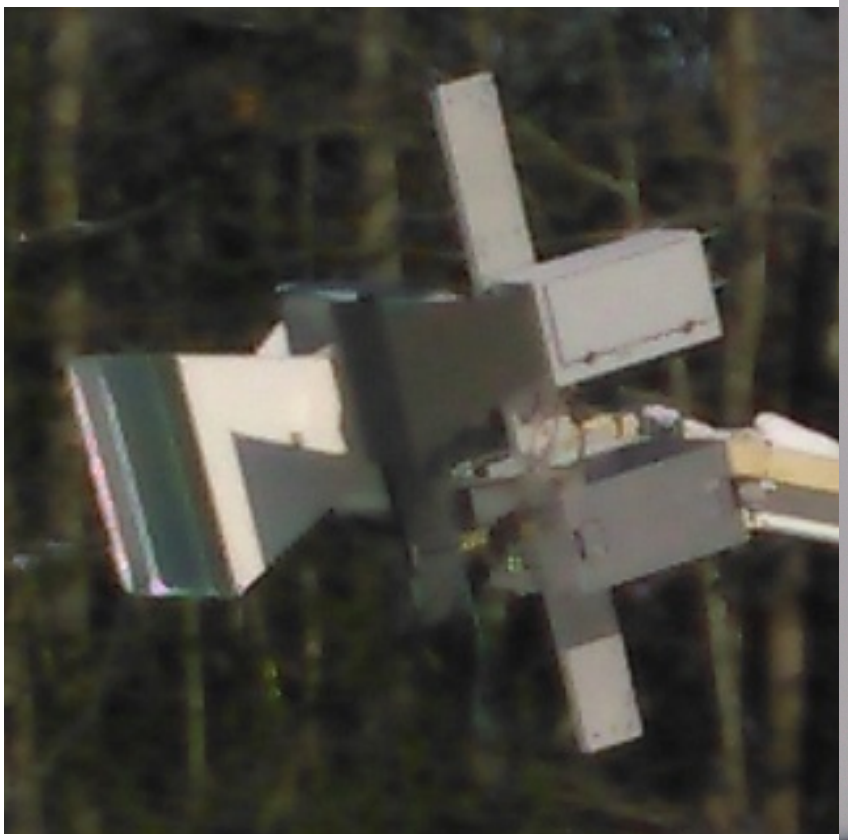

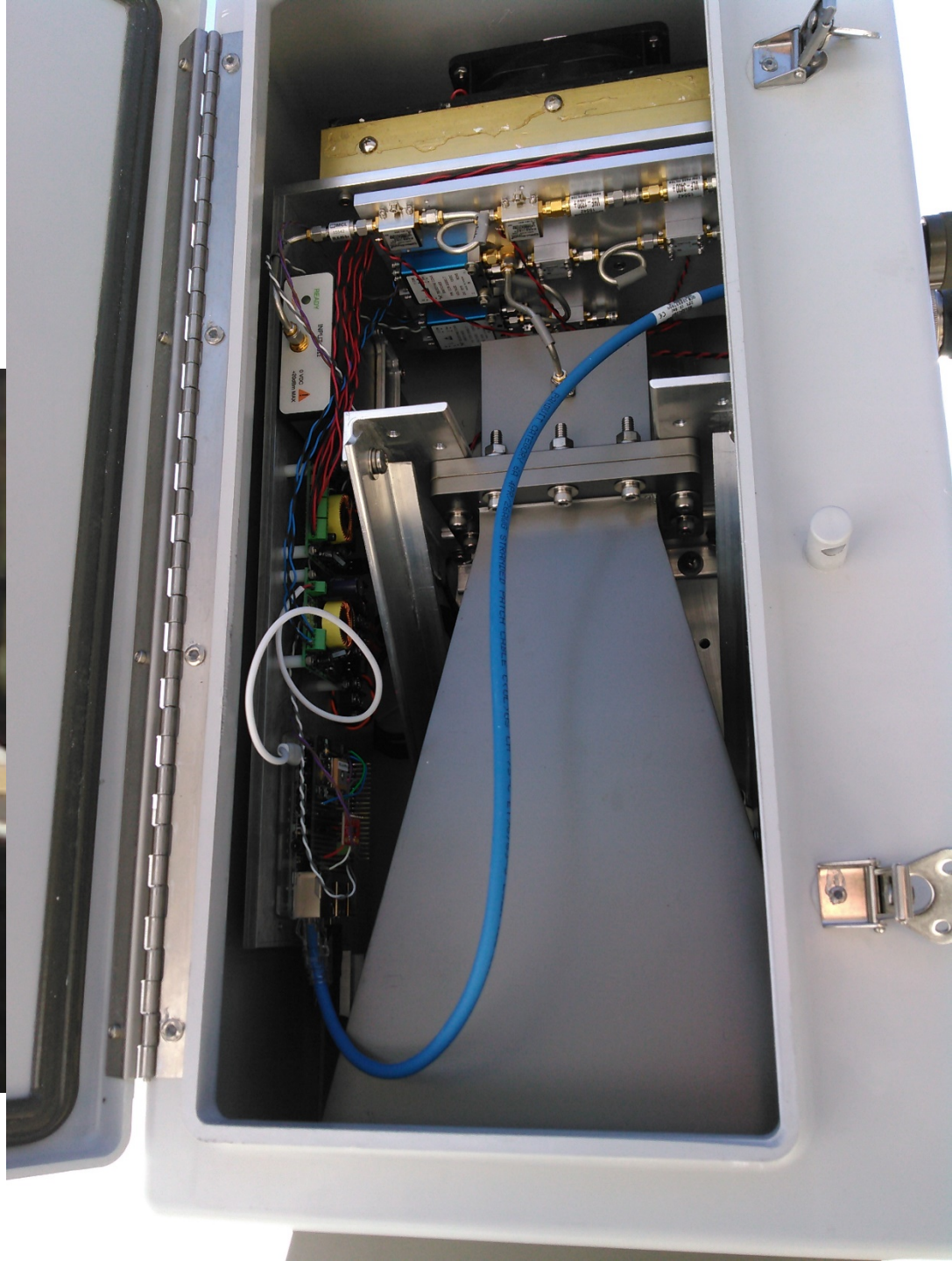

MICHIGAN ENGINEERING
UNIVERSITY OF MICHIGAN

L-band and S-band WiBARs deployed at U-Mich Bio Station

MICHIGAN ENGINEERING
UNIVERSITY OF MICHIGAN

The snowpack

- (Time series of depth is forthcoming from our collaborators)
- Daily WiBAR fixed-angle observations:
  - L-band: 2018 Nov 29 – 2019 Apr 16
  - S-band: 2019 Mar 03 – 2019 Apr 16
- Intensive observations
  - L-band only: 2018 Nov 25; 2019 Jan 04 – 05
  - L- and S-bands: 2019 Mar 03 – 05
  - Intensive obs = elevation angular scans of the field, forest; external calibration msmts

Snowpack profile on 2019 Mar 03:
SD = 63 cm

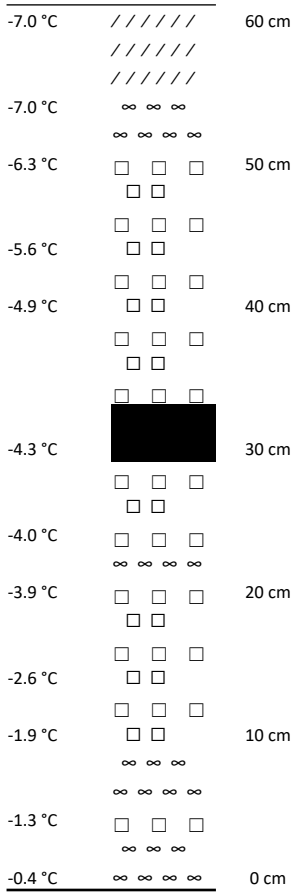

Some early hints of a signal

Peaks vary with incidence angle θ are consistent with expectations:

1. τ ↓ as θ ↑
2. ACF(τ) ↑ as θ ↑, as for rough surfaces

These τ at ~3.5 ns are less than the snow depth, which should be ~5 ns: seeing the ice lenses?

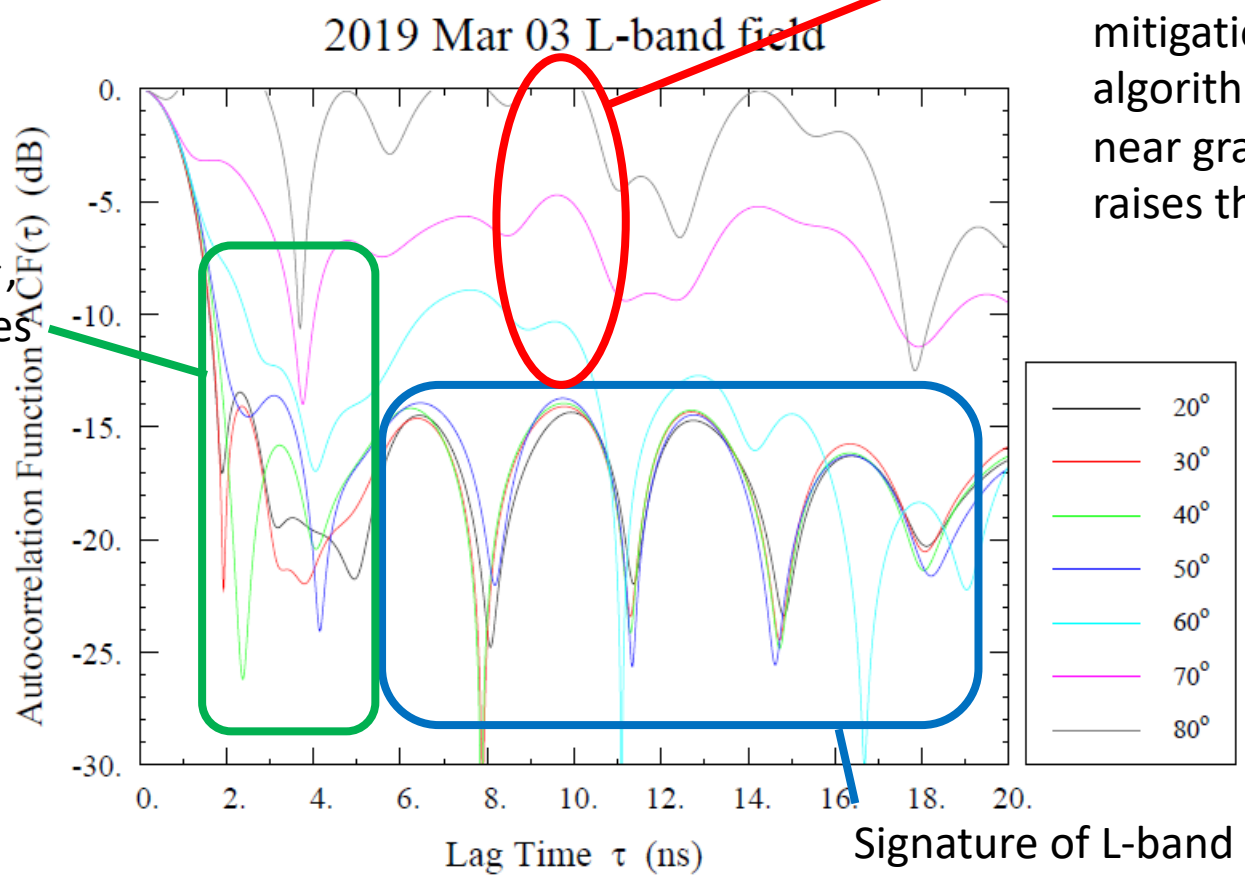

Radio Frequency Interference (RFI) that leaks thru mitigation algorithms near grazing raises the noise floor

Signature of L-band antenna radome

Conclusions

- WiBAR works extremely well for lake ice
- First systematic attempt in dry snow shows the WiBAR signal is harder to get
  - Lots of Radio Frequency Interference
  - Surface roughness reduces coherence
  - There might be a greater sensitivity to ice lenses than the snow depth itself
- Lots more processing to come…
  - other days,
  - the other band (S-band), and
  - combining L- and S-bands together

MICHIGAN ENGINEERING
UNIVERSITY OF MICHIGAN

Backup slides

Roughness: $\exp(-2(ks \cos \vartheta)^2)$

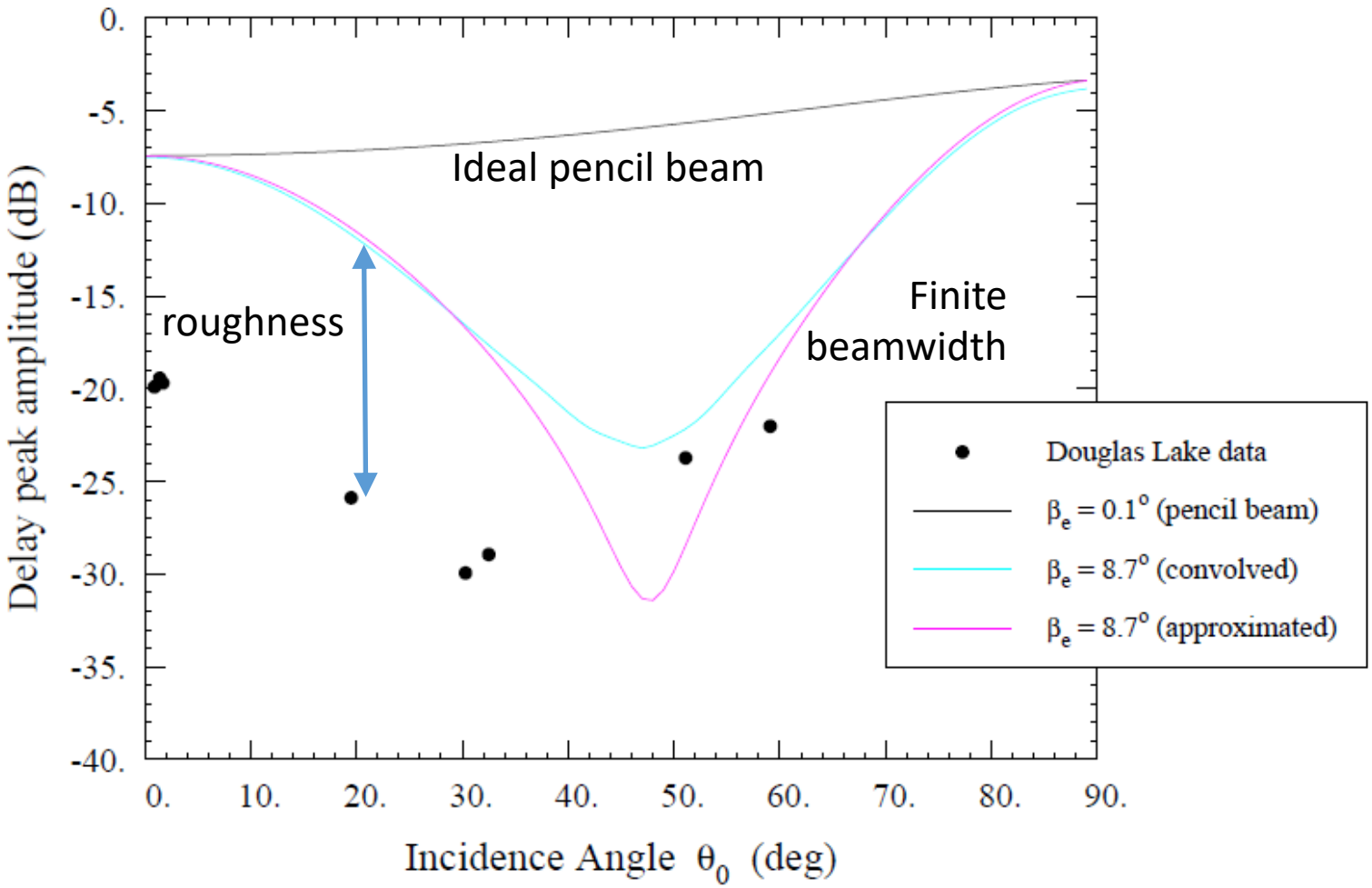

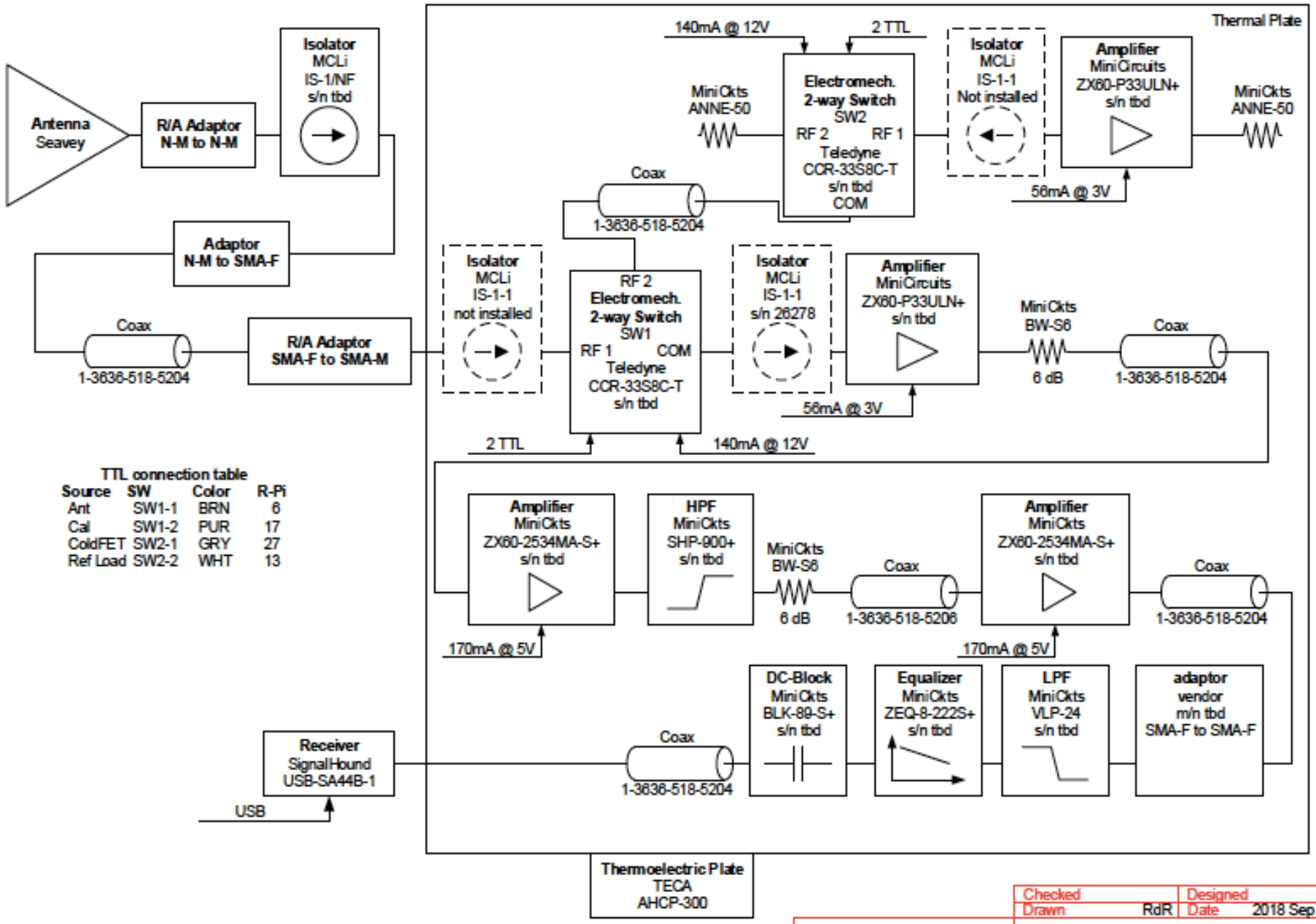

TTL connection table

Source	SW	Color	R-Pi
Ant	SW1-1	BRN	6
Cal	SW1-2	PUR	17
ColdFET	SW2-1	GRY	27
Ref Load	SW2-2	WHT	13

Checked		Designed	
Drawn	RdR	Date	2018 Sep 21

SPACE PHYSICS RESEARCH LABORATORY
The University of Michigan

L-band
WiBAR Block Diagram

Cage Code 0TK63	Drawing No. 164-0074	Rev x08	Sheet 1 of 2	

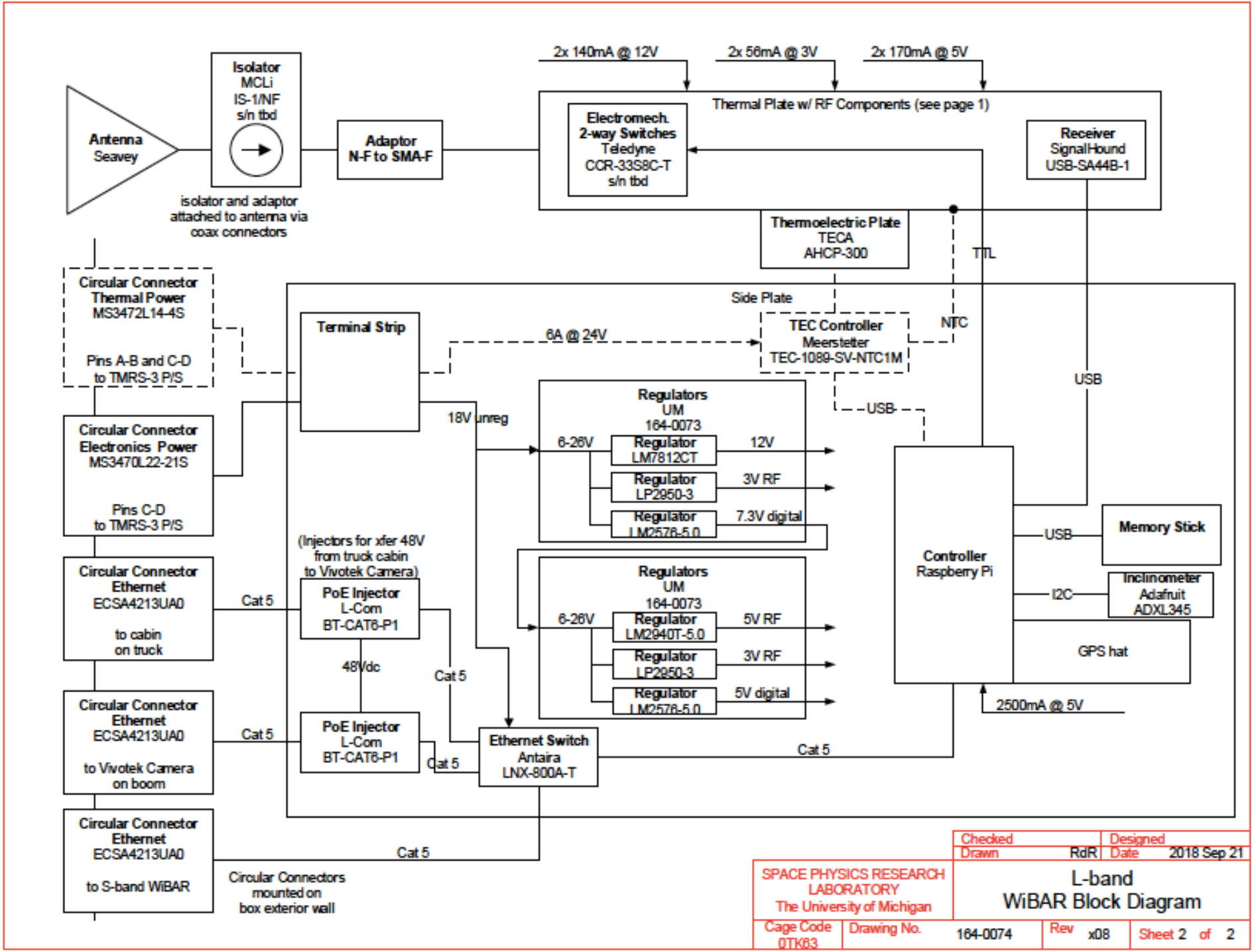
Antenna
Seavey
Isolator
MCLi
IS-1/NF
s/n tbd
isolator and adaptor attached to antenna via coax connectors
Adaptor
N-F to SMA-F
2x 140mA @ 12V
2x 56mA @ 3V
2x 170mA @ 5V
Thermal Plate w/ RF Components (see page 1)
Electromech. 2-way Switches
Teledyne
CCR-33S8C-T
s/n tbd
Receiver
SignalHound
USB-SA44B-1
Thermoelectric Plate
TECA
AHCP-300
TTL
Circular Connector
Thermal Power
MS3472L14-4S
Pins A-B and C-D to TMRS-3 P/S
Side Plate
Terminal Strip
6A @ 24V
TEC Controller
Meerstetter
TEC-1089-SV-NTC1M
NTC
USB
USB
18V unreg
Regulators
UM
164-0073
6-26V
Regulator
LM7812CT
12V
Regulator
LP2950-3
3V RF
Regulator
LM2576-5.0
7.3V digital
Circular Connector
Electronics Power
MS3470L22-21S
Pins C-D to TMRS-3 P/S
(Injectors for xfer 48V from truck cabin to Vivotek Camera)
Circular Connector
Ethernet
ECSA4213UA0
to cabin on truck
Cat 5
PoE Injector
L-Com
BT-CAT6-P1
48Vdc
Cat 5
Regulators
UM
164-0073
6-26V
Regulator
LM2940T-5.0
5V RF
Regulator
LP2950-3
3V RF
Regulator
LM2576-5.0
5V digital
Controller
Raspberry Pi
USB
Memory Stick
I2C
Inclinometer
Adafruit
ADXL345
GPS hat
2500mA @ 5V
Circular Connector
Ethernet
ECSA4213UA0
to Vivotek Camera on boom
Cat 5
PoE Injector
L-Com
BT-CAT6-P1
Cat 5
Ethernet Switch
Antaira
LNX-800A-T
Cat 5
Circular Connector
Ethernet
ECSA4213UA0
to S-band WiBAR
Cat 5
Circular Connectors mounted on box exterior wall
Checked
Drawn RdR
Designed
Date 2018 Sep 21
SPACE PHYSICS RESEARCH LABORATORY
The University of Michigan
L-band
WiBAR Block Diagram
Cage Code 0TK63
Drawing No. 164-0074
Rev x08
Sheet 2 of 2

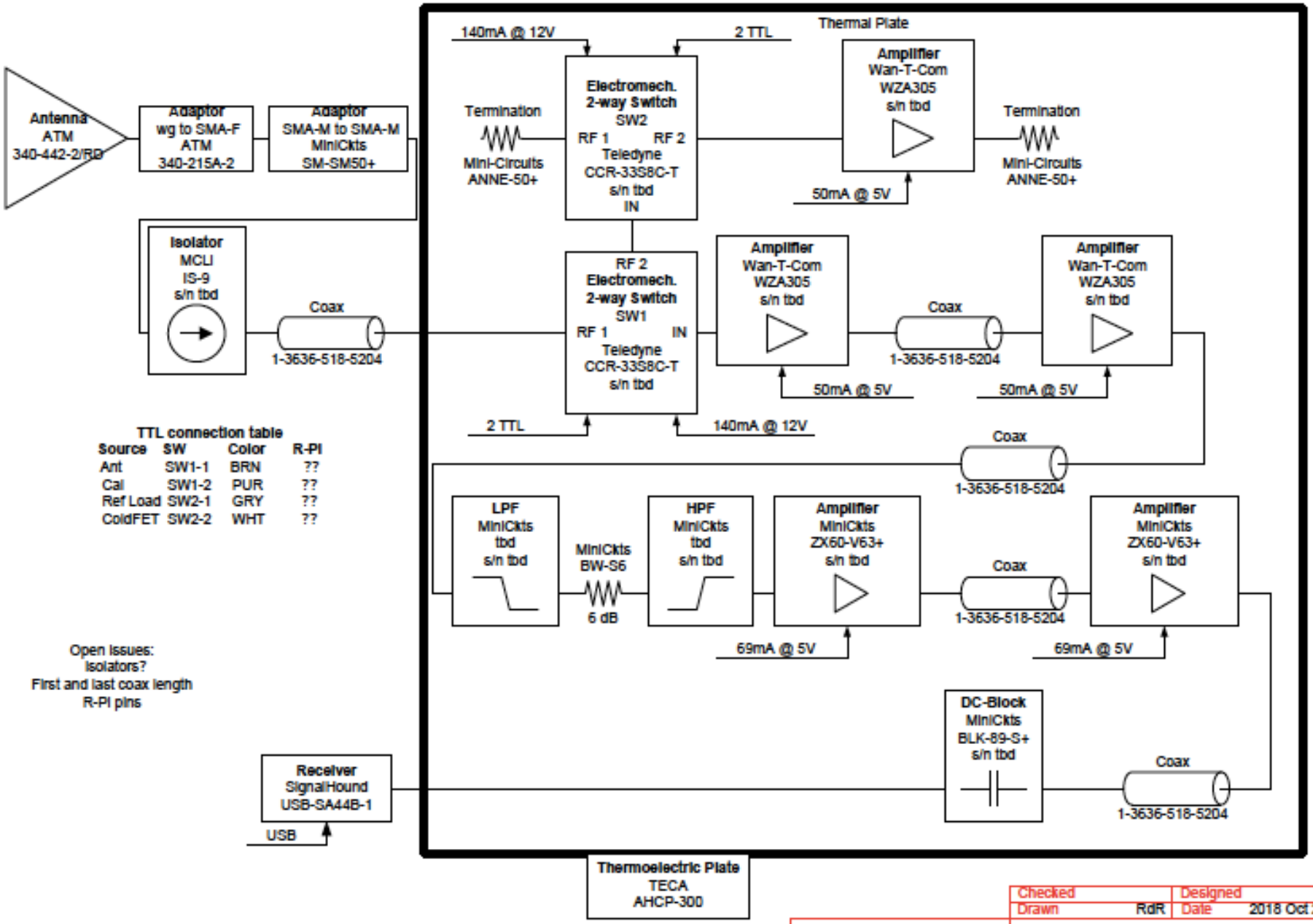

TTL connection table

Source	SW	Color	R-PI
Ant	SW1-1	BRN	??
Cal	SW1-2	PUR	??
Ref Load	SW2-1	GRY	??
ColdFET	SW2-2	WHT	??

Open Issues:
Isolators?
First and last coax length
R-PI pins

Checked		Designed	
Drawn	RdR	Date	2018 Oct 29

SPACE PHYSICS RESEARCH LABORATORY
The University of Michigan

S-band
WiBAR Block Diagram

Cage Code	Drawing No.	Rev	Sheet 1 of 2
0TK63	164-0095	x04	

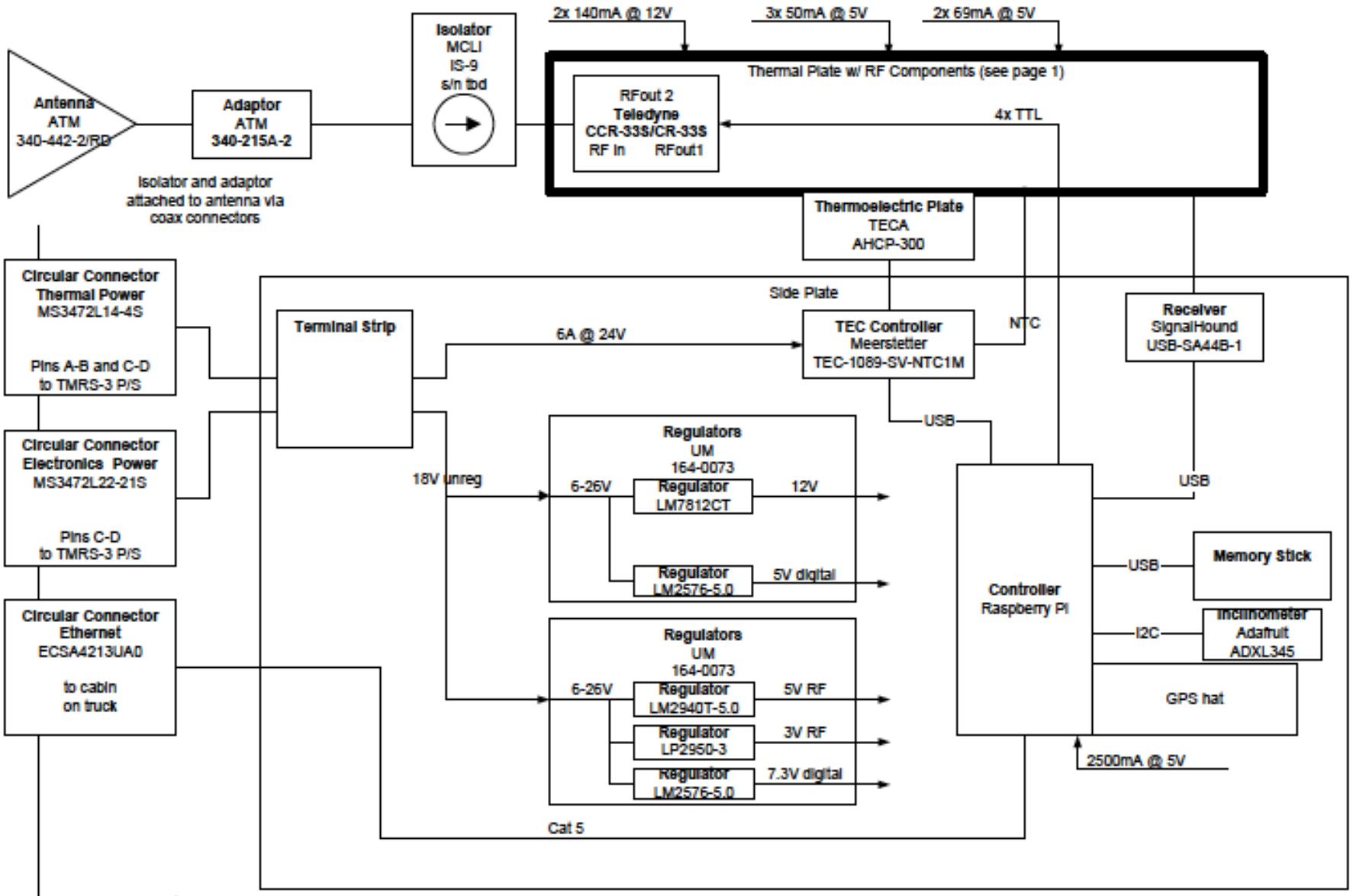

Open Issues:
1. don't need 3V RF
2. do need 12V for RF EM switch

Checked		Designed	
Drawn	RdR	Date	2018 Oct 29

SPACE PHYSICS RESEARCH LABORATORY
The University of Michigan

S-band
WiBAR Block Diagram

Cage Code 0TK63	Drawing No. 164-0095	Rev x04	Sheet 2 of 2	

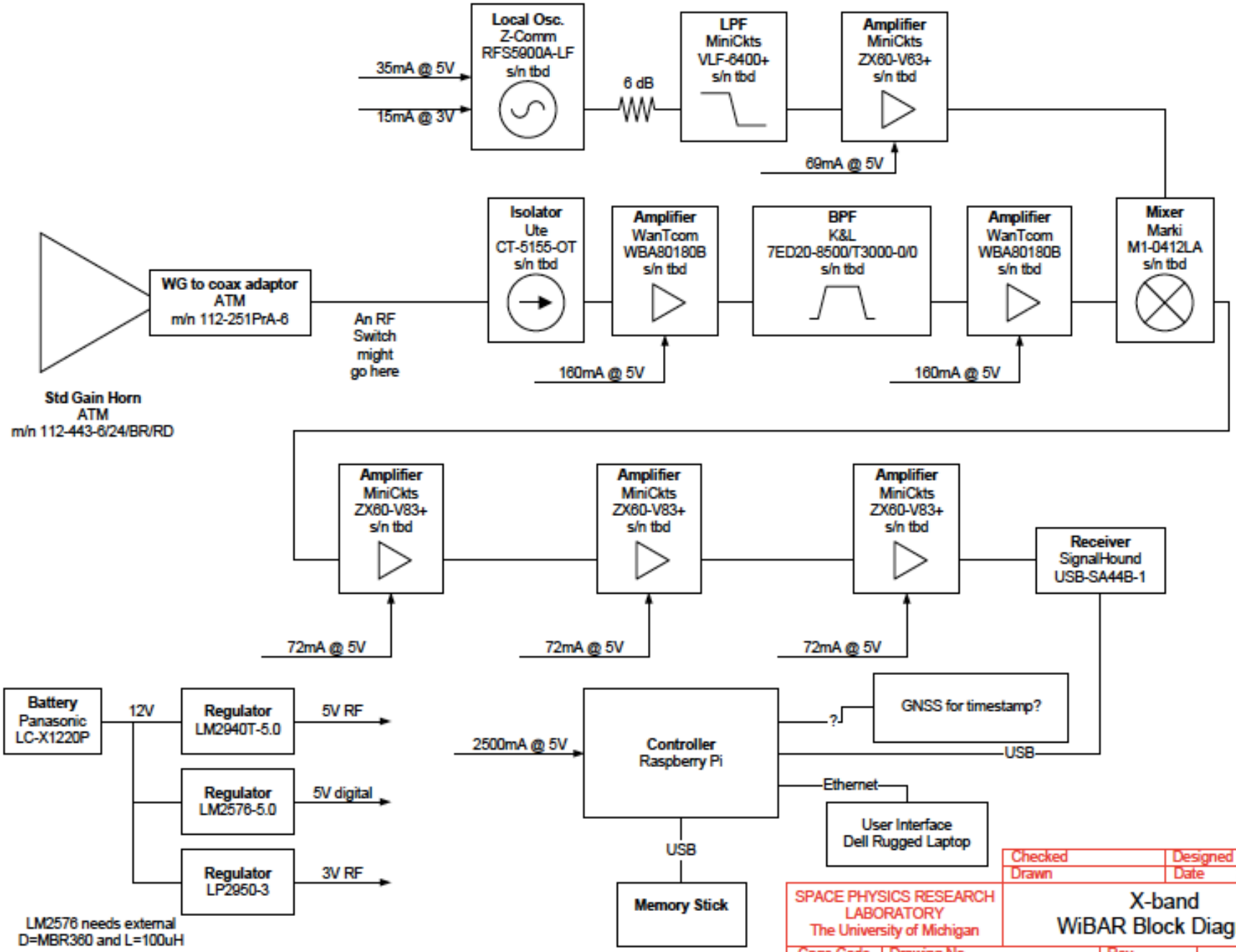
Local Osc.
Z-Comm
RFS5900A-LF
s/n tbd
35mA @ 5V
15mA @ 3V
6 dB
LPF
MiniCkts
VLF-6400+
s/n tbd
Amplifier
MiniCkts
ZX60-V63+
s/n tbd
69mA @ 5V
Std Gain Horn
ATM
m/n 112-443-6/24/BR/RD
WG to coax adaptor
ATM
m/n 112-251PrA-6
An RF
Switch
might
go here
Isolator
Ute
CT-5155-OT
s/n tbd
Amplifier
WanTcom
WBA80180B
s/n tbd
160mA @ 5V
BPF
K&L
7ED20-8500/T3000-0/0
s/n tbd
Amplifier
WanTcom
WBA80180B
s/n tbd
160mA @ 5V
Mixer
Marki
M1-0412LA
s/n tbd
Amplifier
MiniCkts
ZX60-V83+
s/n tbd
72mA @ 5V
Amplifier
MiniCkts
ZX60-V83+
s/n tbd
72mA @ 5V
Amplifier
MiniCkts
ZX60-V83+
s/n tbd
72mA @ 5V
Receiver
SignalHound
USB-SA44B-1
Battery
Panasonic
LC-X1220P
12V
Regulator
LM2940T-5.0
5V RF
Regulator
LM2576-5.0
5V digital
Regulator
LP2950-3
3V RF
LM2576 needs external
D=MBR360 and L=100uH
2500mA @ 5V
Controller
Raspberry Pi
?
GNSS for timestamp?
USB
Ethernet
User Interface
Dell Rugged Laptop
USB
Memory Stick
Checked
Drawn
Designed
Date 2017 Aug 01
SPACE PHYSICS RESEARCH
LABORATORY
The University of Michigan
X-band
WiBAR Block Diagram
Cage Code
0TK63
Drawing No. 164-0069
Rev x03
Sheet 1 of 1
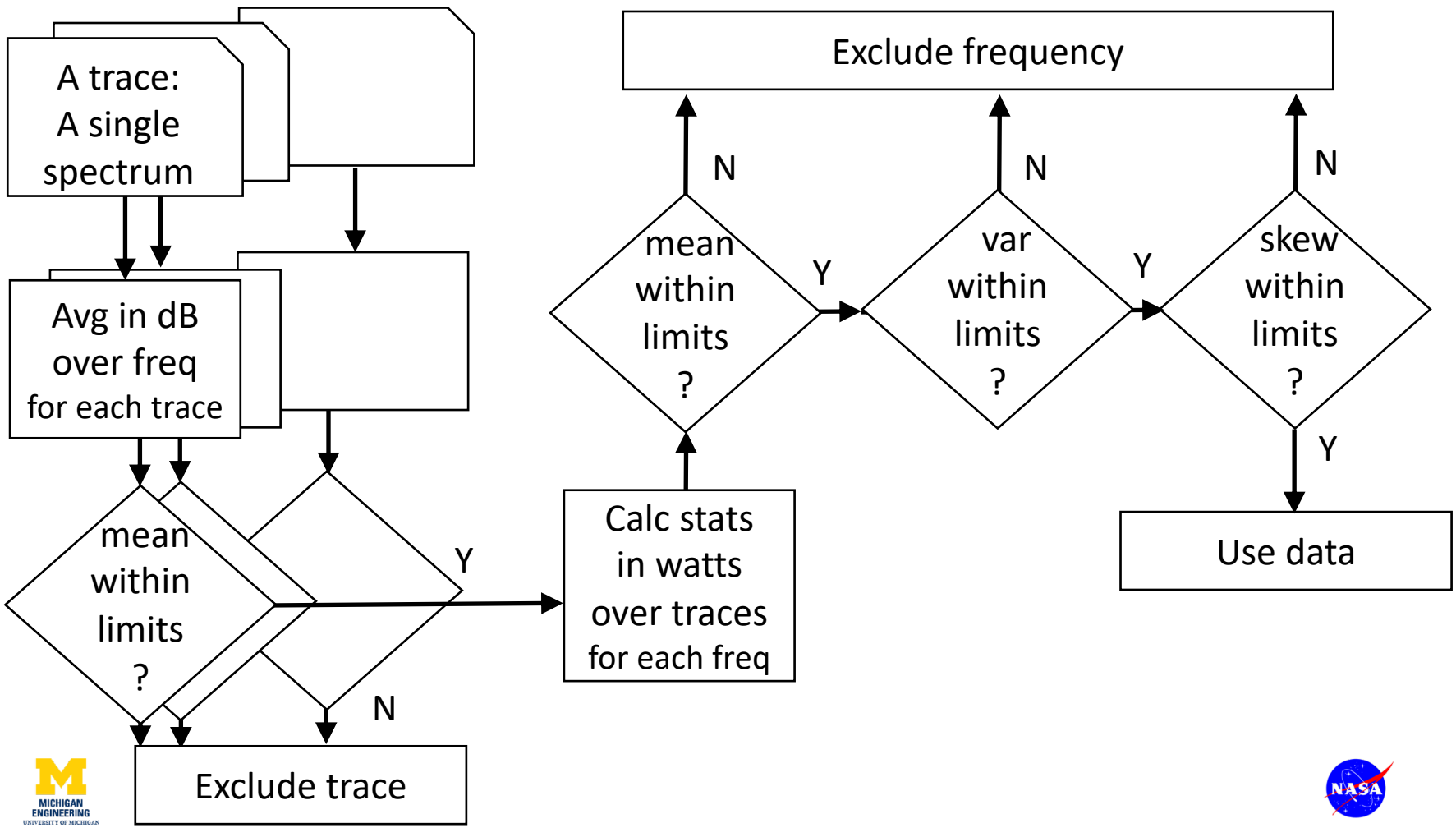
RFI mitigation