REMI - Reduced Envelope Multi-Spectral Imager for Sustained Land Imaging

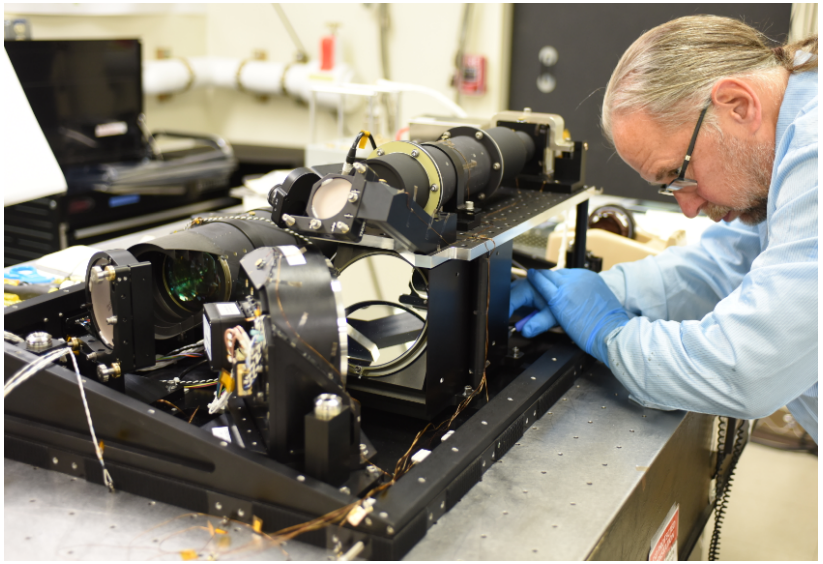

Dennis Nicks, PI
James Howell, PM

Earth Science Technology Forum

June 2019

Sustainable Land Imaging (SLI) Program

- The Sustainable Land Imaging program aims to continue the 45+ year Landsat through the development of a new generation of smaller, less costly instruments that meet or exceed current Landsat imaging capabilities

- NASA ESTO SLI-Technology (2015 ROSES A.47)
  - New measurement technologies that enable future Land Imaging
  - Reduce overall program cost

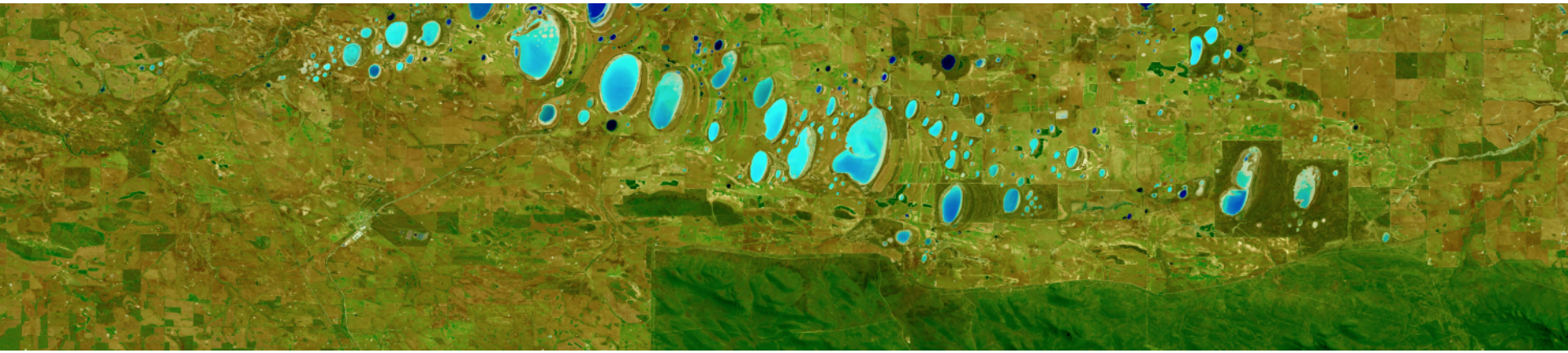

NASA / USGS

Reduced Envelope Multispectral Imager (REMI)

- Airborne, multispectral VIS-SWIR demonstrator
- Sensor fully integrated into aircraft test configuration
- Engineering flight completed – April 2019
- The REMI architecture meets SLI req's
- Features of the REMI architecture:
  - Small Size/Cost
  - One FPA per spectral range (1 @VNIR, 1 @ SWIR)
  - Step-Stare scanning enables high SNR while reducing aperture size
  - Incorporates Landsat spectral bands
  - Extensible to include TIR channels

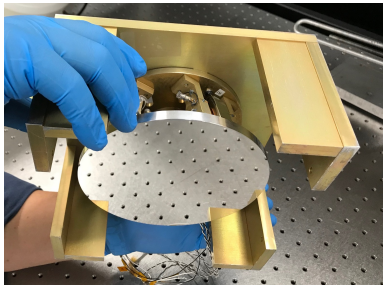

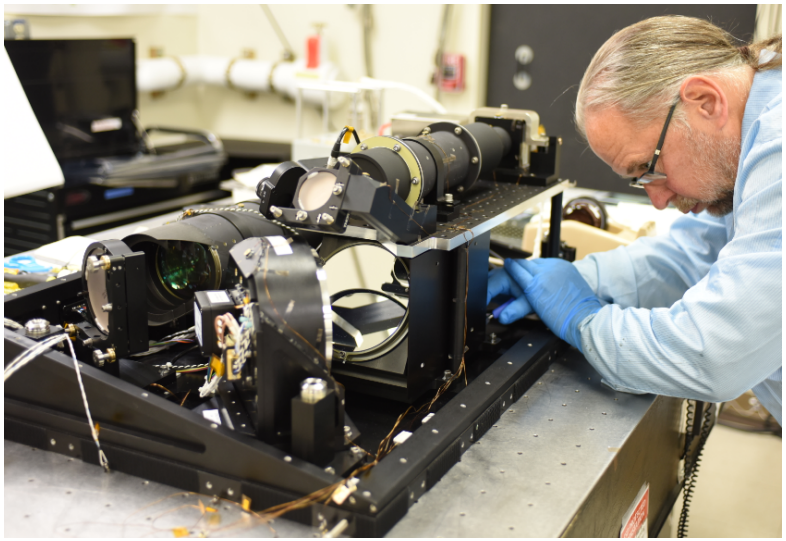

Top-Level REMI Mission Requirements

Ref: 2501786 SLI-T REMI Requirements Document

Parameter	Value
Aircraft	Twin Otter De Havilland DHC-6
Flight altitude	4000 m AGL nominal; 5486 m (18,000 ft) max
Ground sampling distance	< 30 m equivalent at SLI altitude of 705 km
Spectral coverage	See next slide
Aircraft velocity	50 m/sec (~110 mph)
Spectral coverage	400 – 2500 nm; Bands 1-5 (VIS) and Bands 6,7,9 (SWIR)
Step-n-Stare frequency	15 – 20 Hz
Instrument environment	Pressure-controlled enclosure; thermally controlled
In-flight calibration	Baseline: On-board radiometric calibration before and after every flight. Support capability for in-flight calibrations.
Typical flight day	4.0 hours; 3.25 hours of data collection
On-board electronics & data system	Controls data acquisition, telemetry and data archiving; real-time display of data; instrument control
Data volume, typical flight day	~ 3.5 Tb
Ground data system	Management and archiving of data acquired during flights; Quick-look data assessment

All VSWIR Spectral Bands Demonstrated

Full VSWIR optical solution for SLI-T demo

- Baseline: Enable all 5 visible bands, the Cirrus band and both SWIR bands
- 1 Visible + 1 SWIR detector

TABLE A.2 SLI-T REFERENCE MISSION SPECTRAL IMAGE PERFORMANCE REQUIREMENTS

Band #	Band Name	Band #	Center Wavelength (nm)	Center Wavelength Tolerance (nm)	Minimum Lower Band Edge (nm)	Maximum Upper Band Edge (nm)
1	Coastal Aerosol	1	448	2	443	453
2	Blue	2	482	5	450	515
3	Green	3	562	5	525	600
4	Red	4	655	5	630	680
5	NIR	5	865	5	845	885
6	SWIR 1	6	1610	10	1560	1660
7	SWIR 2	7	2200	10	2100	2300
8	Panchromatic	N/A	590	10	500	680
9	Cirrus	9	1375	5	1360	1390
10	Thermal 1	N/A	10800	200	10300	11300
11	Thermal 2	N/A	12000	200	11500	12000

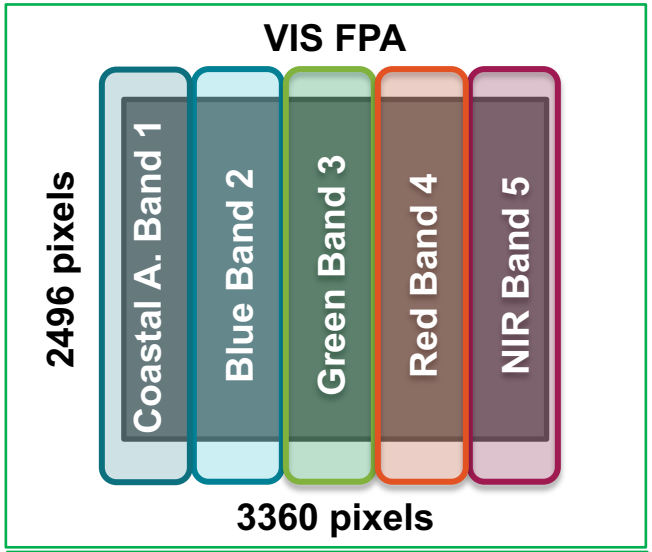

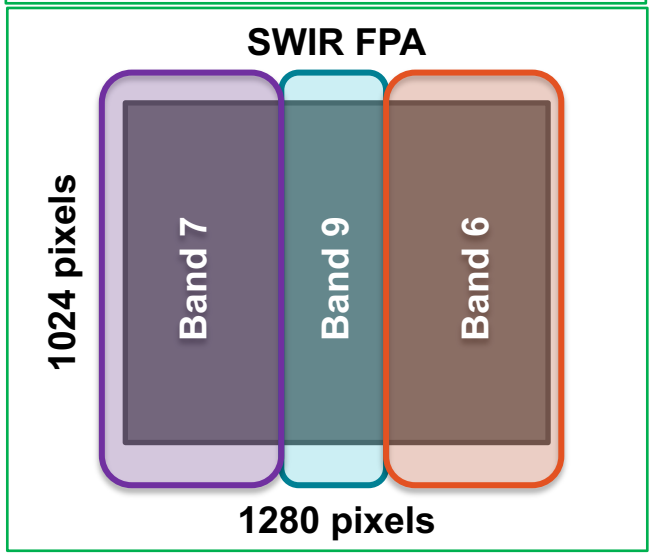

Instrument Design Accommodates VNIR to TIR

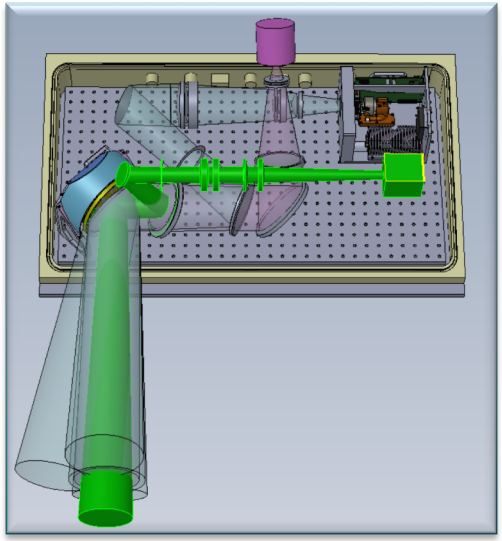

VNIR Optical Path

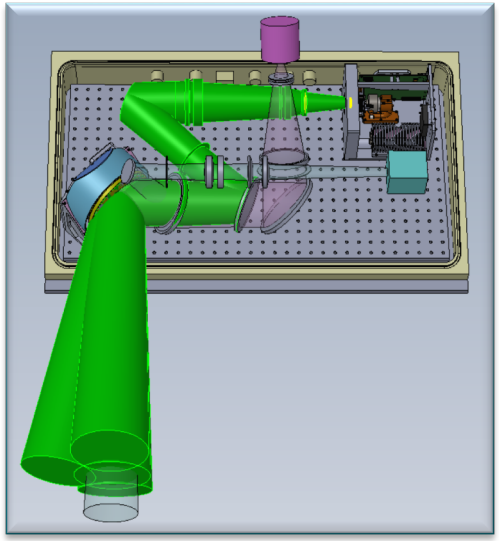

SWIR Optical Path

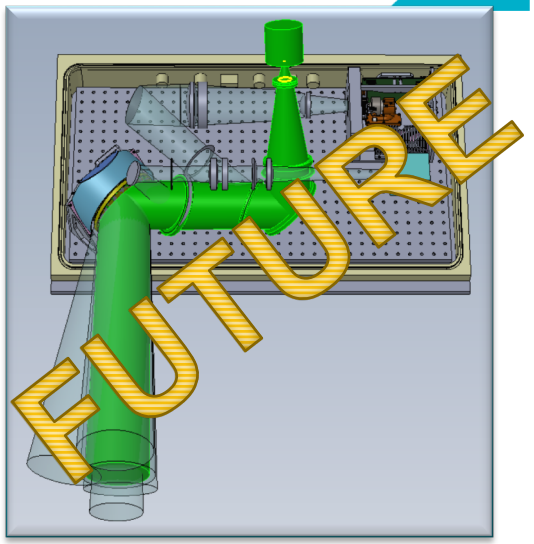

TIR Optical Path

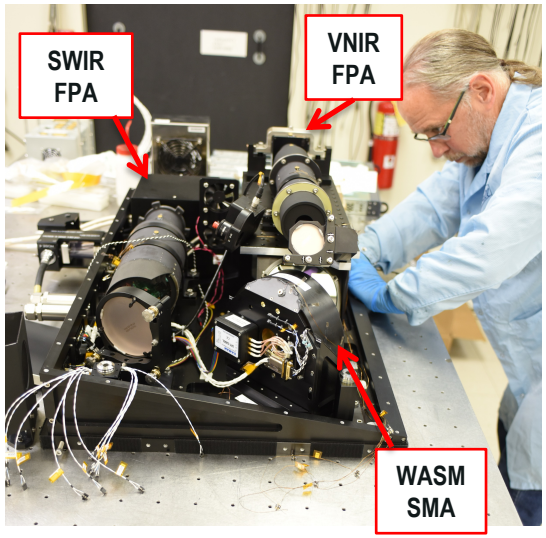

Image Motion Control Enables Smaller Aperture

- In optical instruments, SWaP scales with aperture
- SLI funded REIS (NASA SLI) identified that the driving requirement for aperture size was relative edge response (RER)
  - RER performance is a function of
    - Motion blur
    - Optics blur
    - Detector footprint
    - Platform jitter
- REMI utilizes active image motion control to
  - Reduce motion blur and platform jitter that offset the impacts to smaller aperture
  - Enable smaller aperture / instrument footprint while meeting SLI imaging requirements
- Scan mech reduces number of required detector arrays
  - REMI = 2x detectors for VNIR – SWIR
  - OLI = 14x detectors for VNIR - SWIR

Scan Approach Opens the Design Space

- Whisk Broom: LandSat 1-7
- Push Broom: LandSat 8 & 9 (14 detector modules)
- Step-Stare with Image Motion Correction: SLI-T/REMI

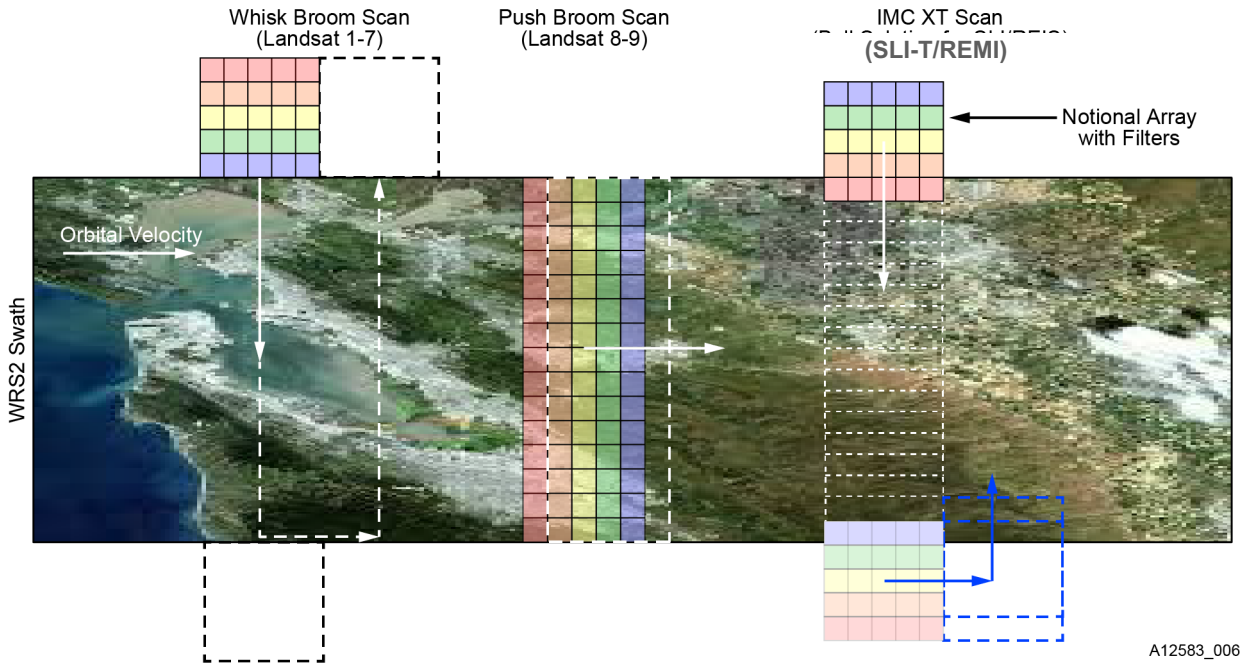

Comparison of three different scan methodologies: Whisk Broom, Push Broom, and Step-Stare.

REMI Program Status

- Flight instrument integration complete
- Laboratory testing complete
- Engineering flight testing complete
- Review of engineering flight data in progress
- Planning for science flight in progress

Quick-Look Imagery

SWIR

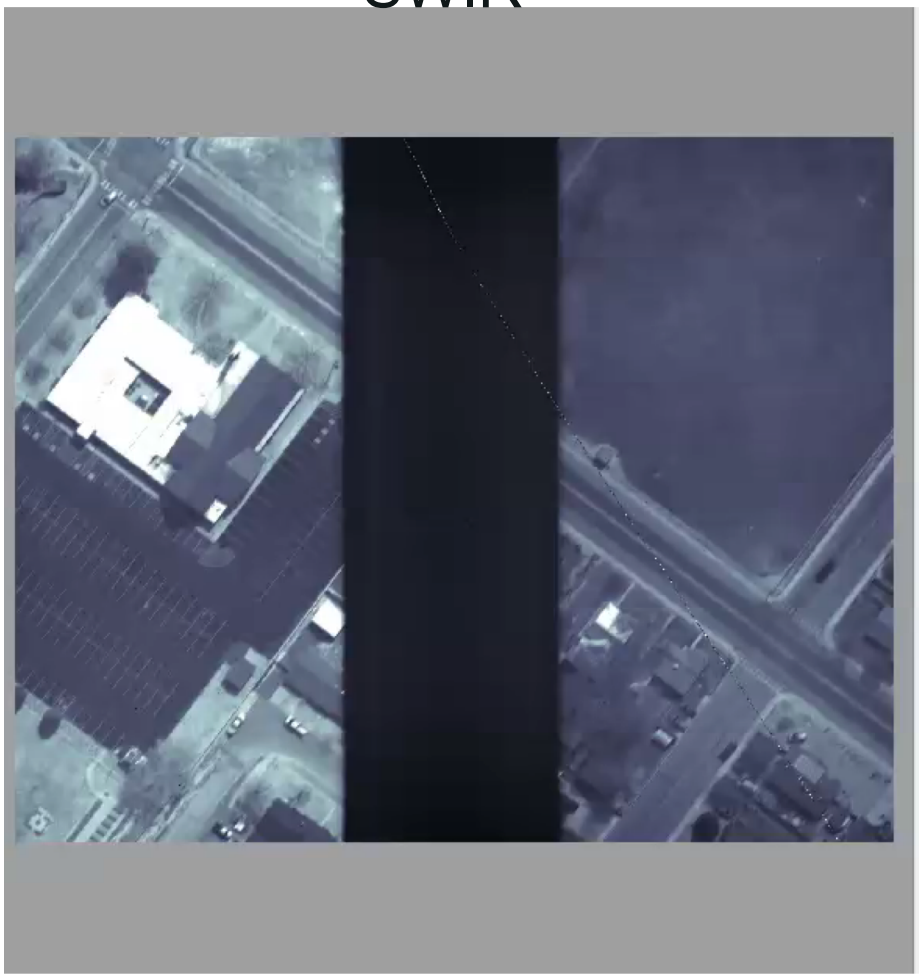

VNIR

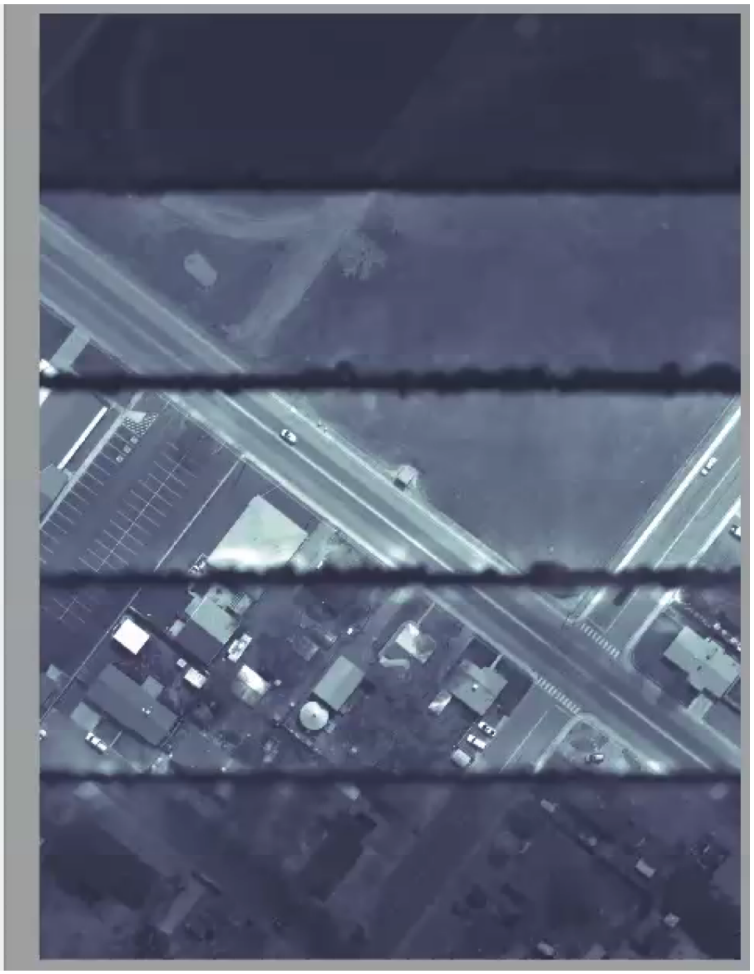

Flight Images / Data

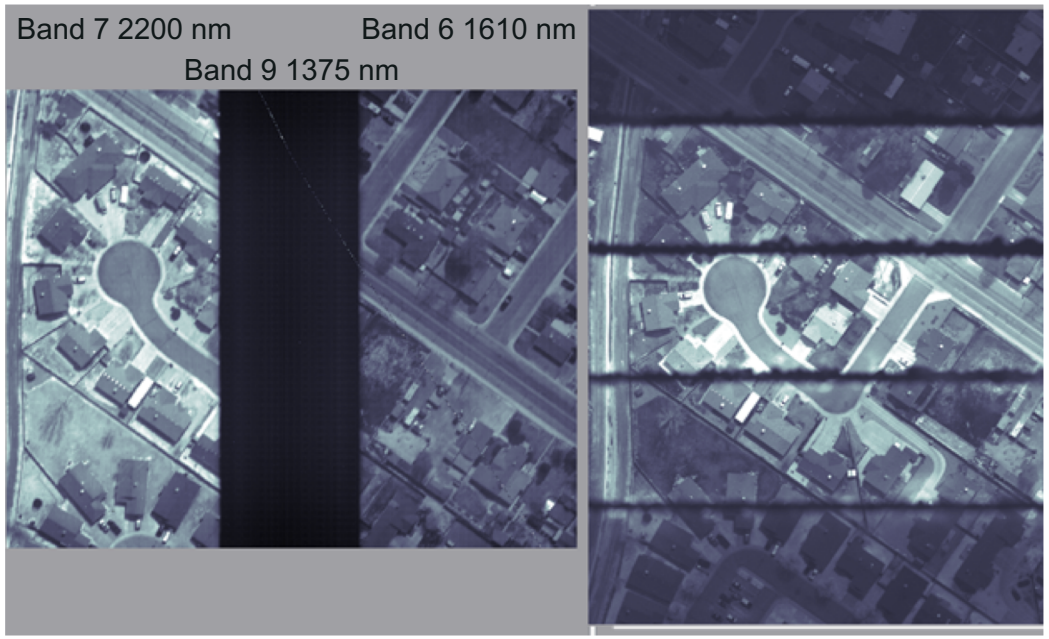

Band 1 448 nm

Band 2 482 nm

Band 3 562 nm

Band 4 655 nm

Band 5 865 nm

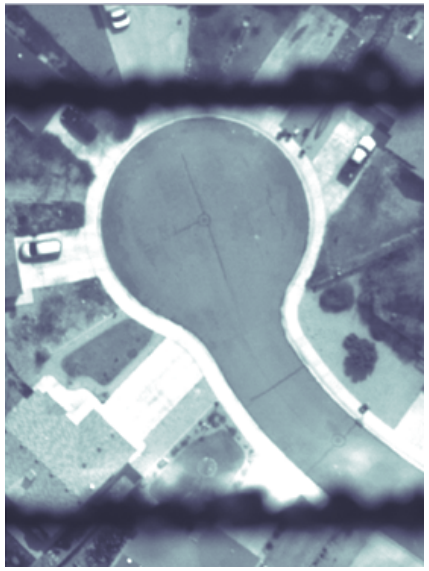

Preliminary analysis indicates:

- Step-stare control and stabilization works well
- Active stabilization results in image stability on the order of optical quality
    - Aircraft environment more challenging than space
- In-process: Georegistration / mosaic image generation

Next Steps

- Preparing for Science Flights (September 2019)
  - Further laboratory verification
  - Software enhancements
  - Additional Radiometric/Spectral Calibration
- Science Flight Objectives
  - Landsat/Sentinel-2 under-flight
  - Vicarious calibration sites
  - Inland water collects
- Spaceborne instrument concept underway

Summary

- REMI utilizes a high performance scan mirror to achieve Landsat requirements with significant reduction in SWaP
  - Reduces image smear typical of Landsat instruments
  - Enables smaller aperture
  - Enables use of simple detector types
  - Key scan mirror technology has been space qualified on the GEMS and TEMPO programs
- REMI is fully integrated and tested
- Engineering flight completed
  - ***Demonstrated successful use of scan mechanism for step-stare sampling of FOR and image stabilization***
- Science flights planned for later in 2019

Acknowledgements

- Funding from ESTO/SLI-T, Contract No. NNX16AP63G
- Ball Team:
  - Dennis Nicks, PI
  - Jim Howell, PM
  - Bob Slusher, AI&T
  - Paul Kaptchen, AI&T / Aircraft Ops
  - Nathan Leisso, Calibration
  - Nathan Showalter, Technical Support / Flight Team
  - Betsy Farris, Systems Engineering / Flight Team
  - Tom Kampe, Optical Engineering
  - Emily Mrkvicka, Optical Engineering
  - Bob Warden, Mechanical
  - Kyle Solander, Electronics
  - Jonathan Fox, Software / Flight Team
  - Homero Gutierrez, Scan Mechanism Controls
  - Nick Polaski, Controls Implementation
  - Lyle Ruppert, L1B Data Processing

THANK YOU!