A Lightweight, 64-element, Organic Phased Array with Integrated Transmit-Receive SiGe Circuitry in the X Band

Carlos A. Donado Morcillo[1],
C. Patterson[1], T. K. Thrivikraman[1], B. Lacroix[1], B. Wilson[2], B. Hudson[2], C. T. Coen[1], C. H. J. Poh[1], T. Heath[2], J. D. Cressler[1] and J. Papapolymerou[1]

[1] School of ECE, Georgia Institute of Technology,
[2] Georgia Tech Research Institute (GTRI)

Once Upon a Time in the North Pole…

Pictures from "*Polar explorers struggle across Arctic ice to measure impact of global warming*", available online at www.dailymail.co.uk (March 2009)

Near Future Goal (Concept)

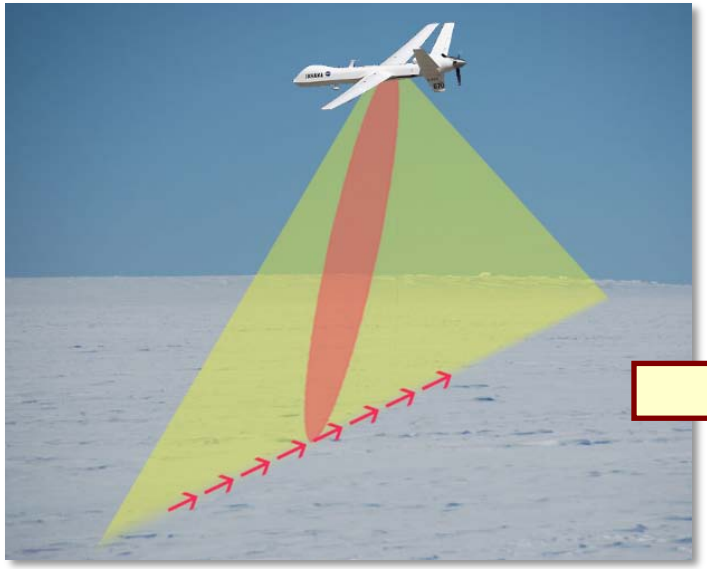

Unmanned Air Vehicle with lightweight phased array for radar surveying
Source: nasa.gov

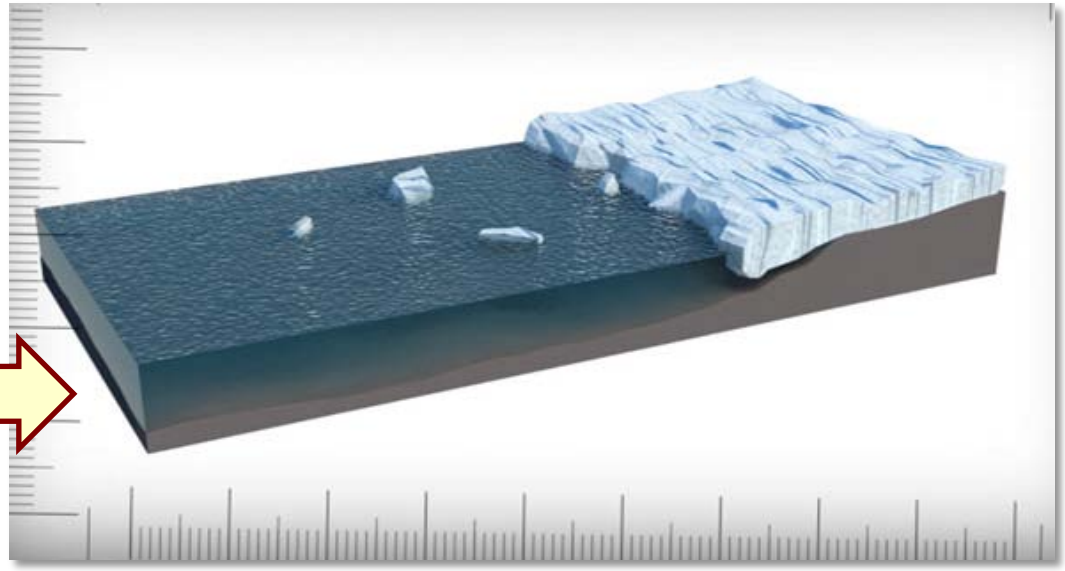

Survey Results: 3D model of the ice layer
Source: National Geographic

The Purpose of this Work

✓To develop a high-performance, low-cost and lightweight transmit/receive (Tx/Rx) phased array for efficient unmanned ice-survey studies in X-band

✓X-band radar will be part of sensor suite

3-D SOP Approach

- Multilayer Organic Technology
- Embedding of Low Cost SiGe and RF MEMS Electronics
- Back-end Electronics and Control Using FPGA Technology

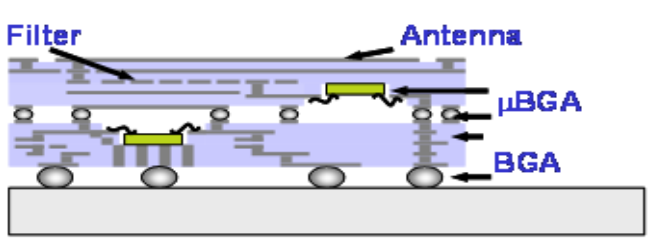

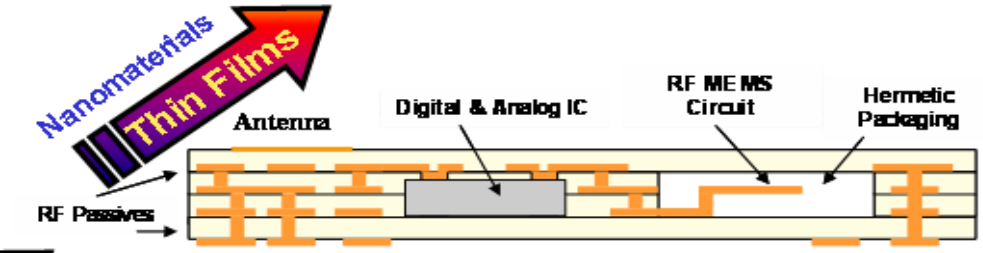

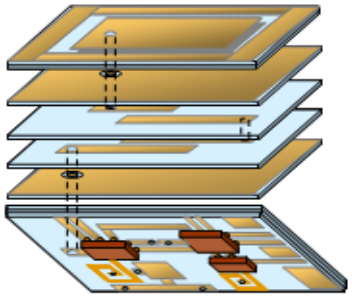

Epoxy PWB

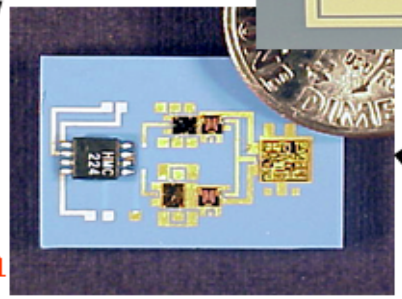

Ceramic LTCC

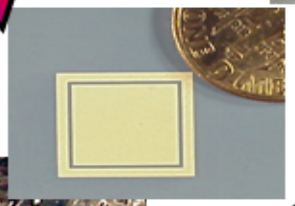

Organic LCP

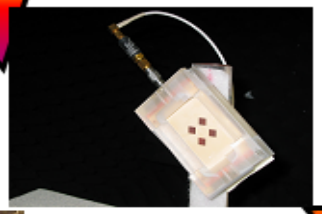

3D

Reconfigurable

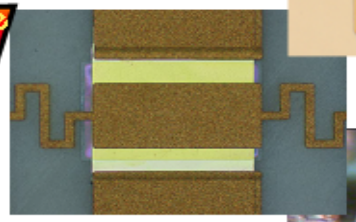

RF MEMS

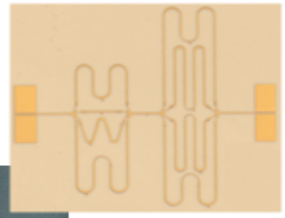

Hybrid Solution

"Best of Breed" Solution

- **Lower Cost**
- **Smaller Size/Weight**
- **Better Performance**
- **Multi Functionality**

Agenda

- SiGe RF Circuits
- Phased Array Features
- System Components
- Performance Test Results
- Conclusions

Phased Array Features

Integrated High Performance

- Transmit Receive Operation
- Computer Driven Beam Steering

Low Energy Consumption

- Silicon Germanium Integrated Circuits

Low Cost, Lightweight

- Silicon-based Circuitry (MEMS, Tx/Rx IC)
- Organic Substrates (LCP/Duroid)

Phased Array Design Radio Frequency Specifications

- Center Frequency 9.5 GHz
- Target Bandwidth: >500 MHz
- Equal-gain Beam Steering Range: ± 26°
- Transmit/Receive Capability

Radar Block Diagram

GT team is developing the entire radar system

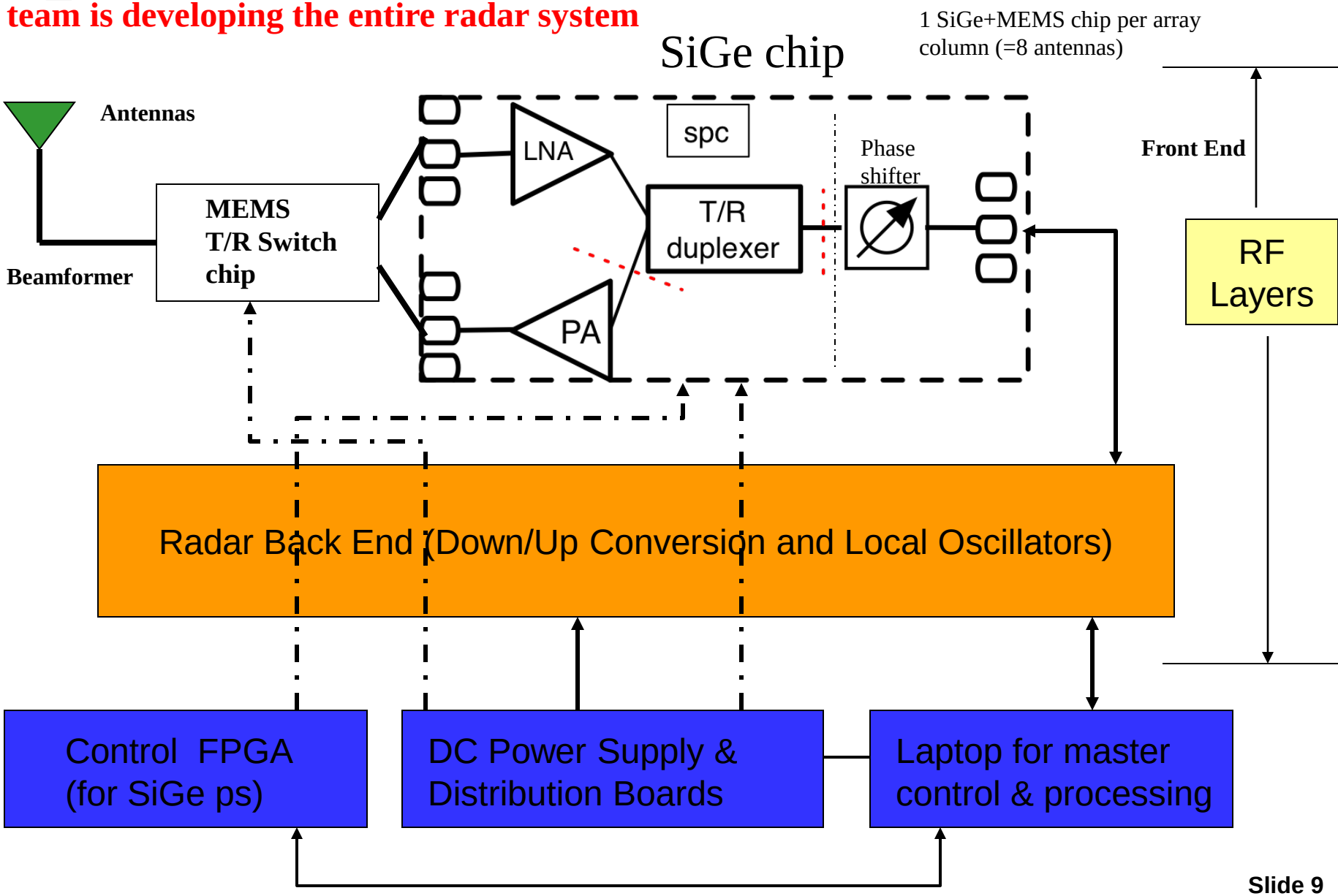

Self-biased PA

- Class AB PA with self-bias network
- 15 dBm Pout at 9.5 GHz
- Designed for robust, uniform performance across array

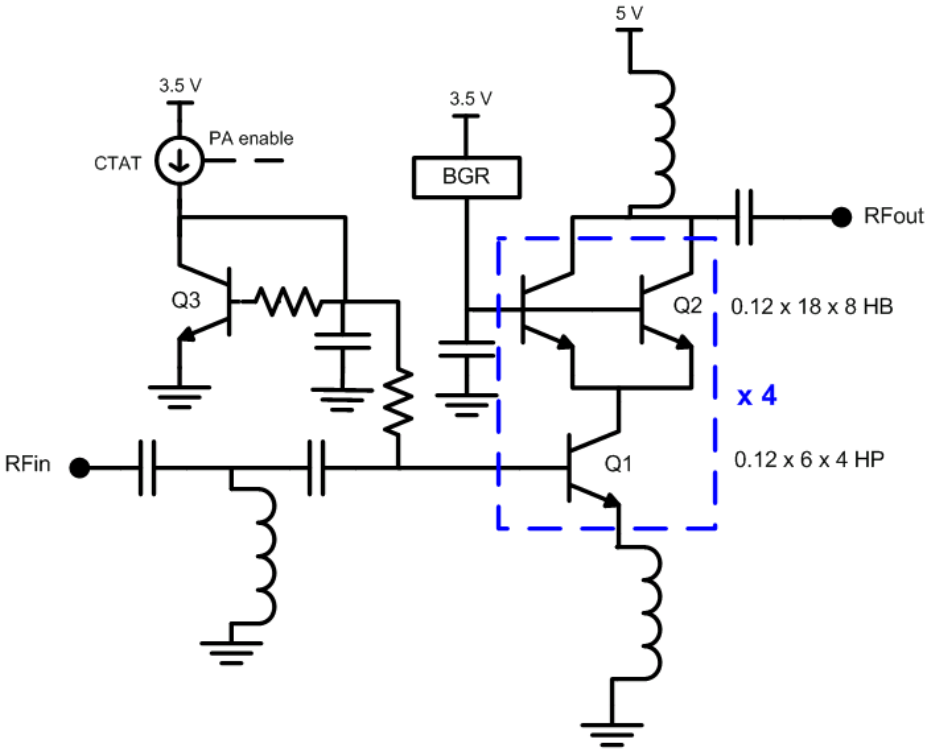

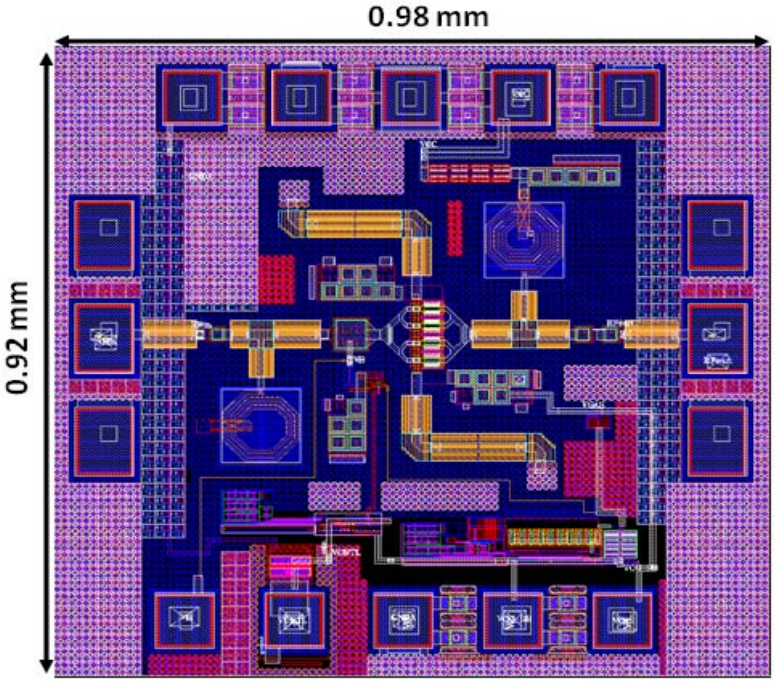

Self-biased PA simulations

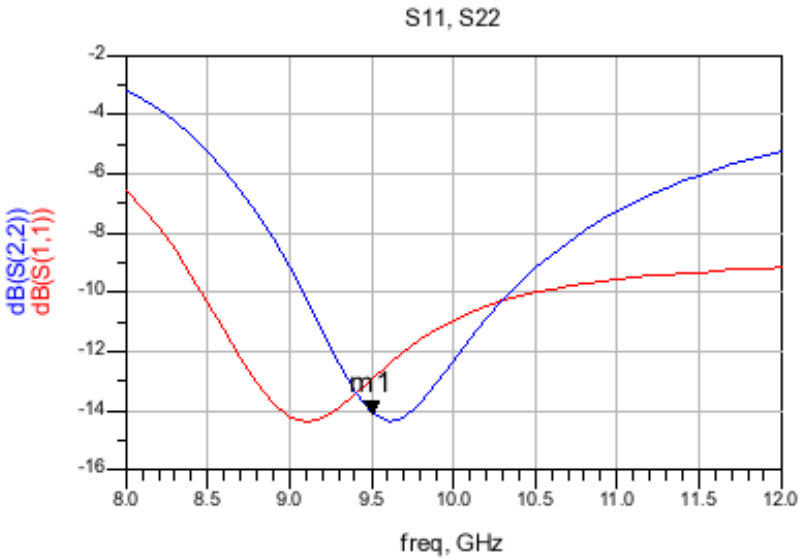

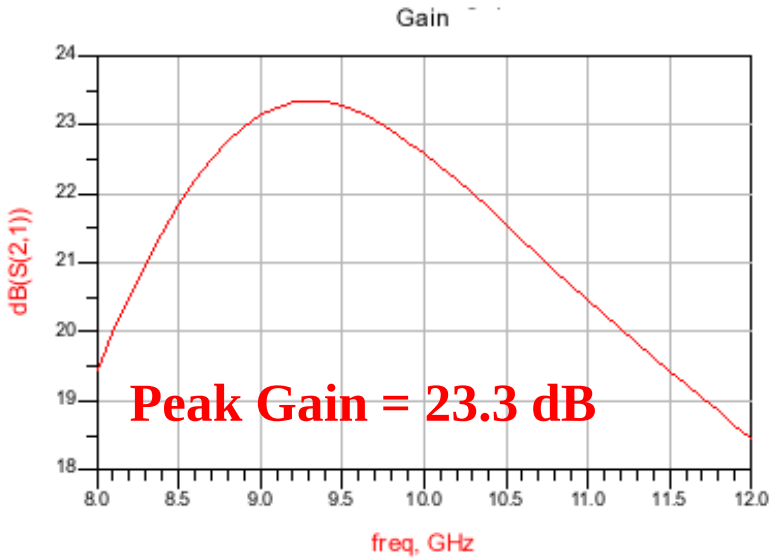

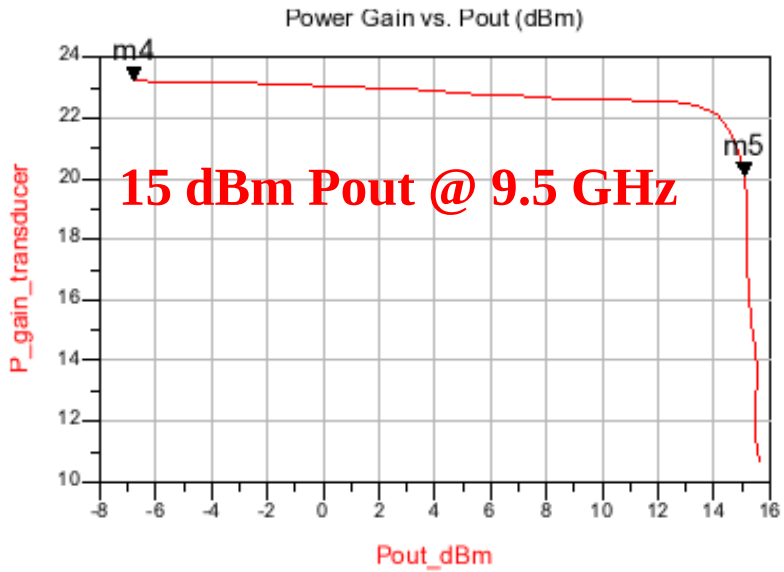

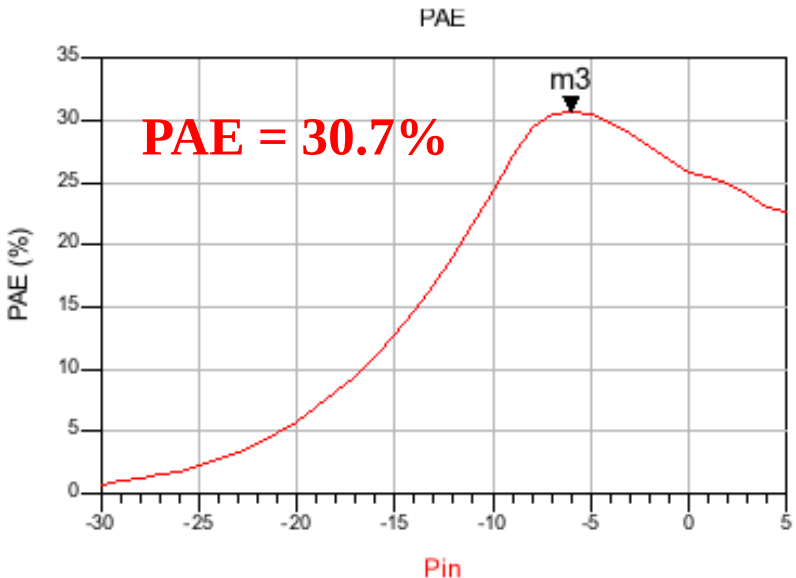

SiGe T/R Chips

Integrated T/R
LNA, PA, duplexer switch
CMOS phase shifter, and digital logic

IBM 8HP Process

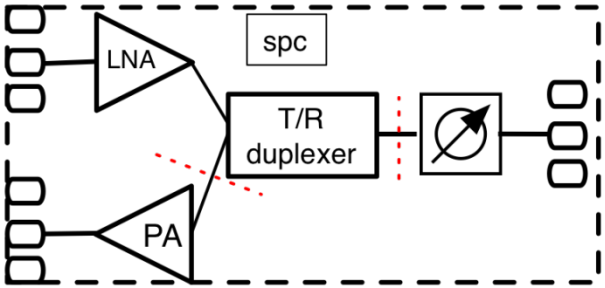

Block Diagram
TR Module

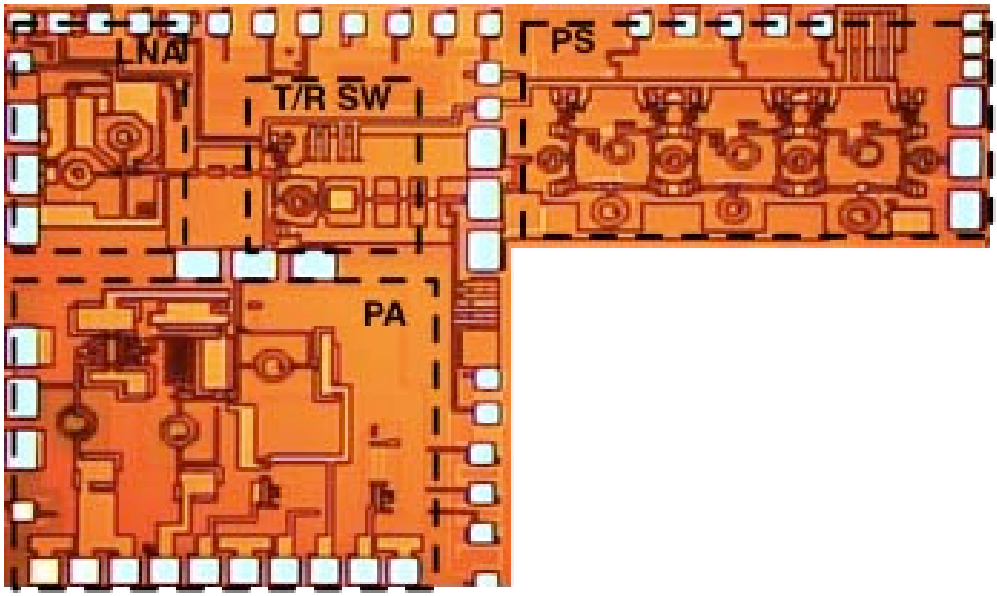

Photo of the TR Module

Layout of T/R Chip

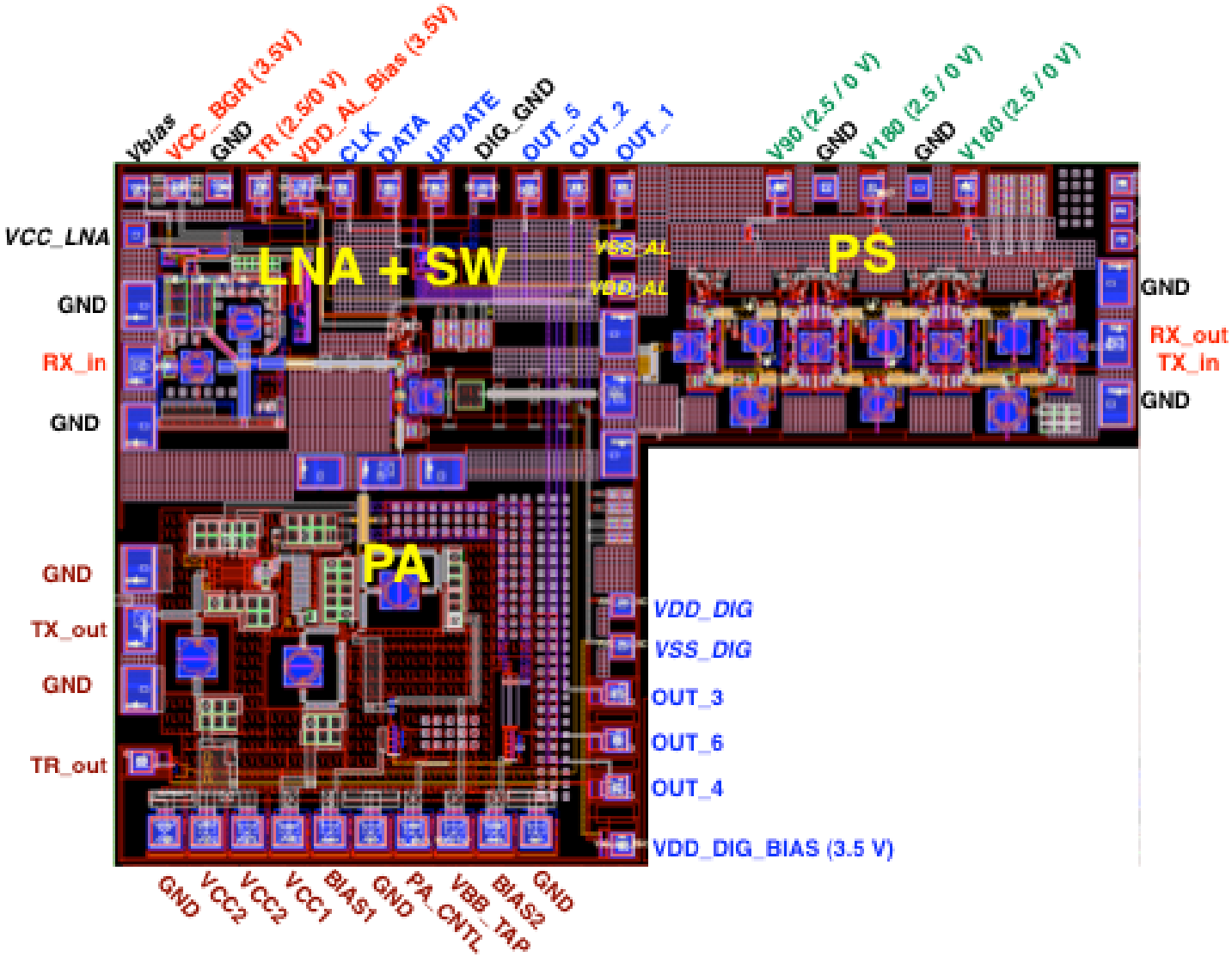

Board Level Rx SiGe Characterization

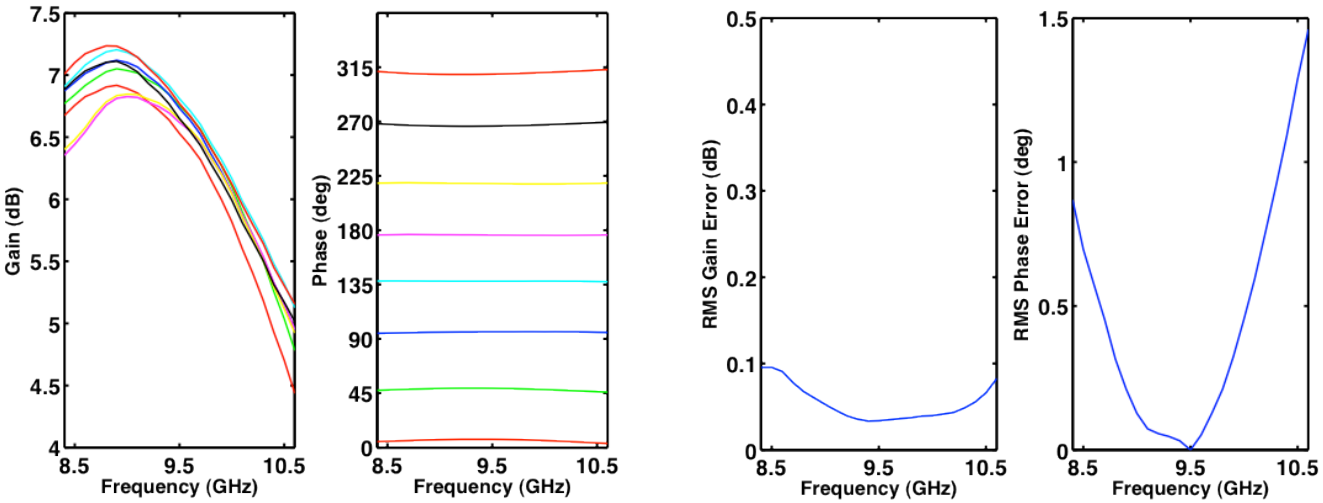

Measured Rx path in the mounted on LCP/Duroid board

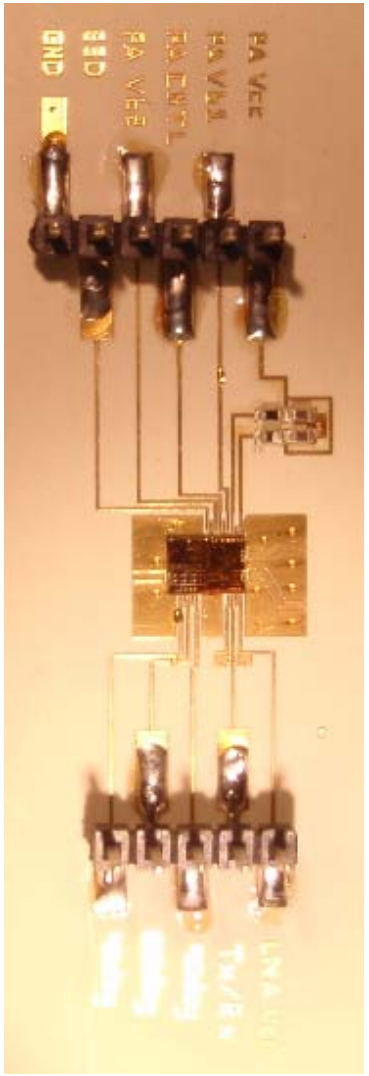

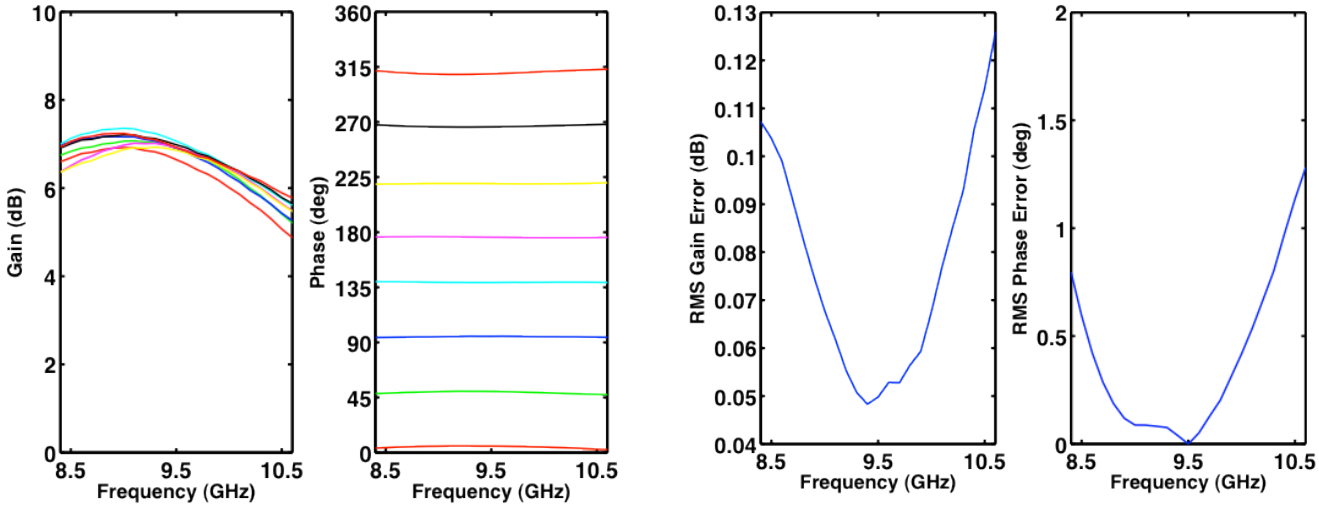

Measured Rx path on Chip

Antenna Board: Overview

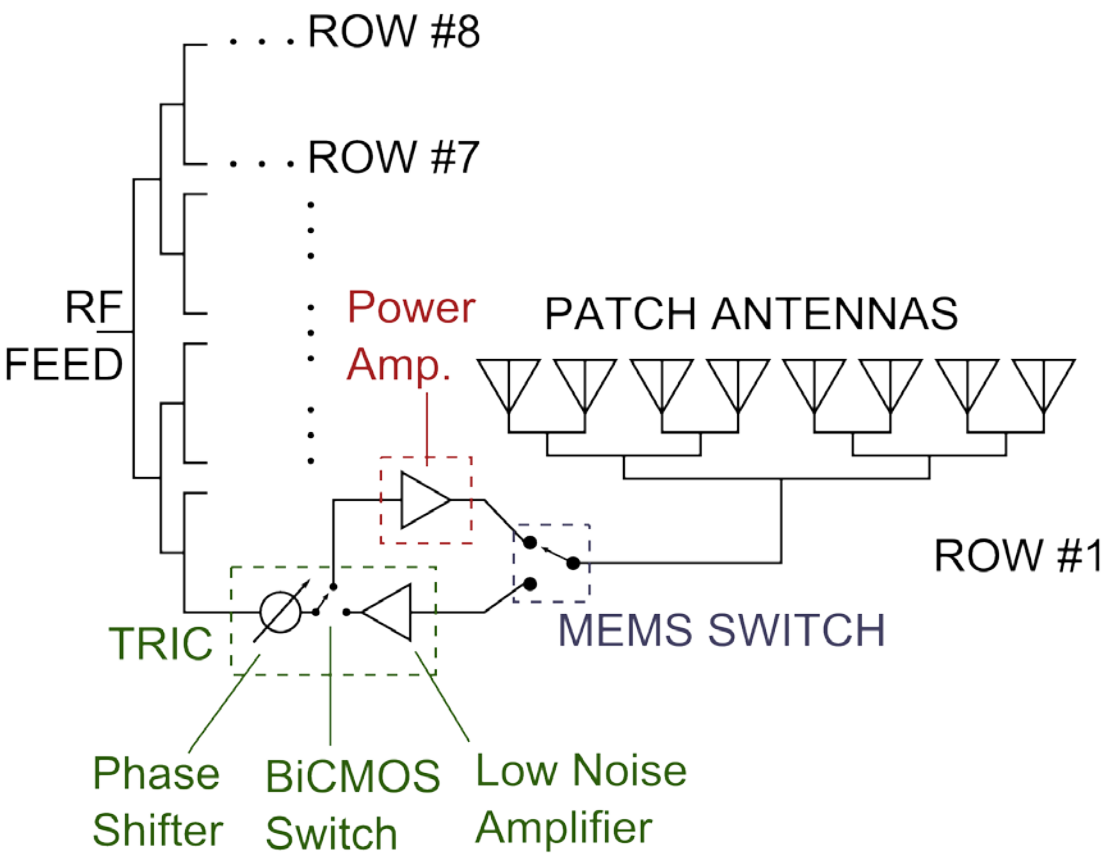

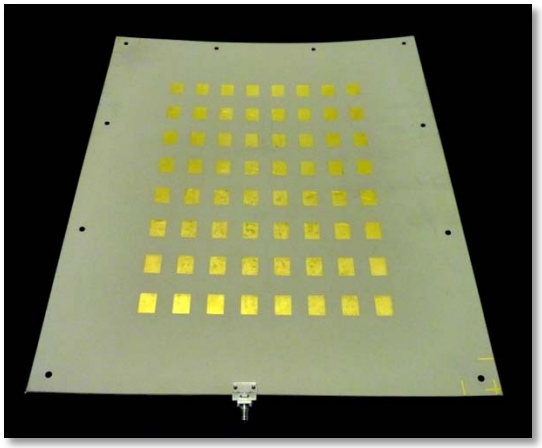

Patch-Antenna Side

Beam-former Side

Antenna Board Dimensions

Dimensions:

30.4 cm x 25.4 cm

[*11.9 in x 10 in*]

Thickness:

1.52 mm

[*60 mil*]

Weight:

184.7 g

[*6.5 oz*]

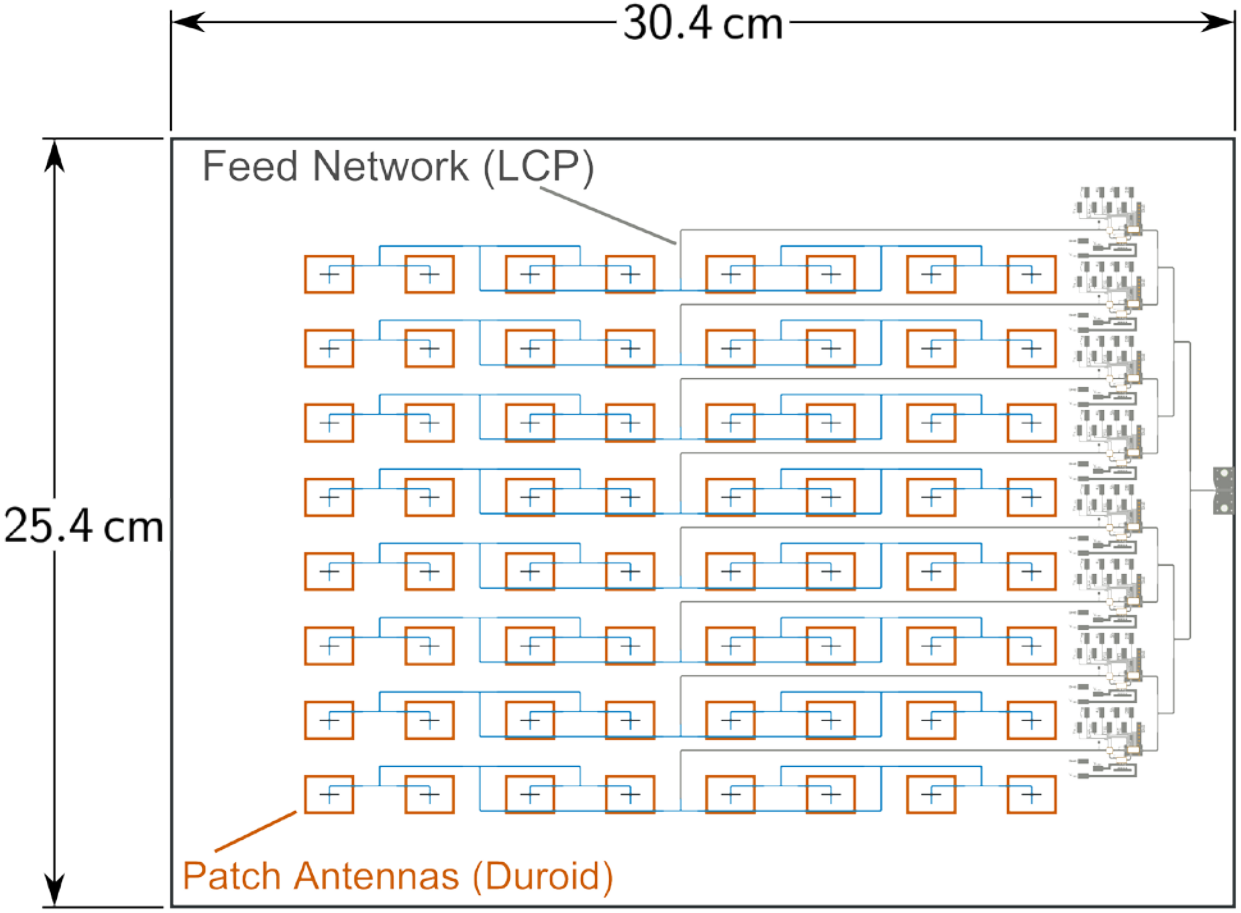

Antenna Board: Substrate Stackup

- Beam former: Rogers 3850 Liquid Crystal Polymer (LCP)
- Patch Antenna Substrate: RT/Duroid 5880 LZ

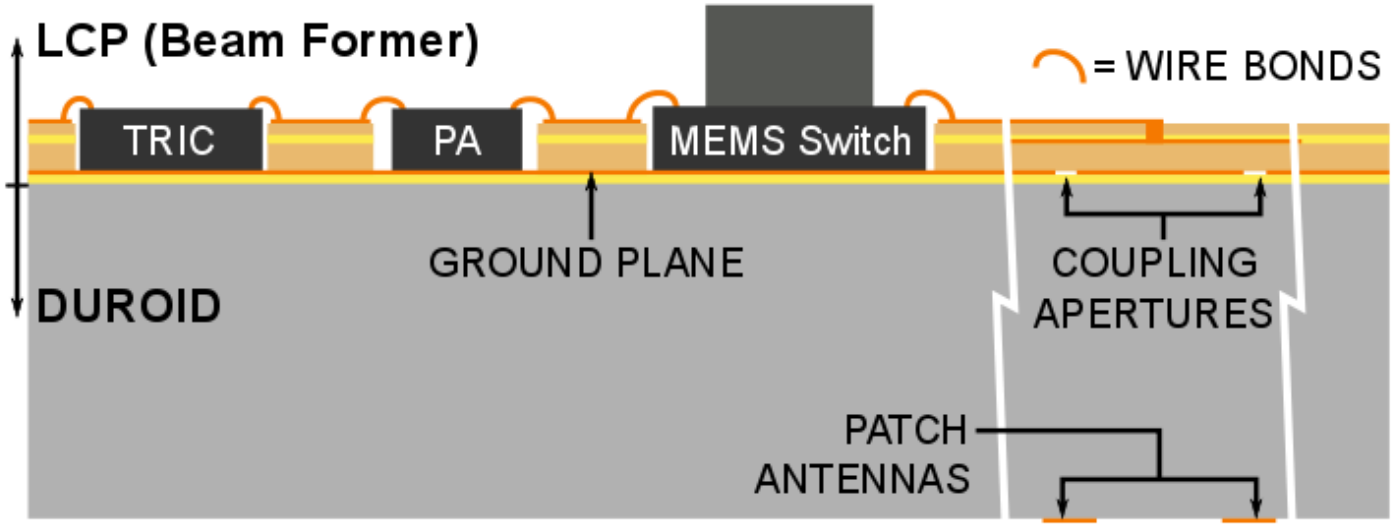

Antenna Board: Integrated Circuits

- **Silicon Germanium (SiGe) Transmit/Receive IC (TRIC):**
  - **Low Noise Amplifier (LNA)**
  - **Phase shifter (PS)**
  - **Tx/Rx BiCMOS Switch**
- **SiGe Power Amplifier (PA)**
- **Commercial Micro Electromechanical System (MEMS) switch – RadantMEMS**

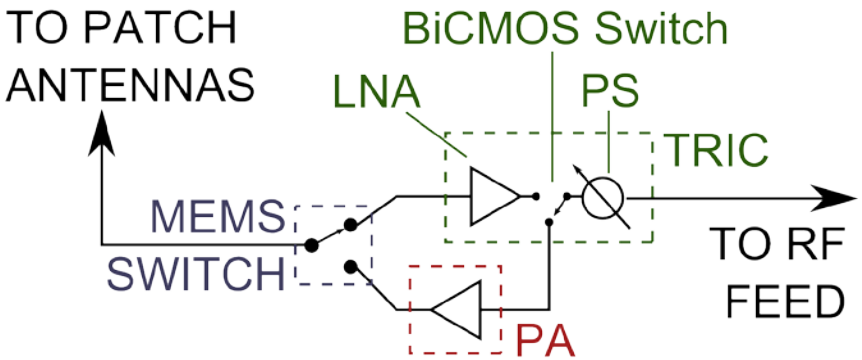

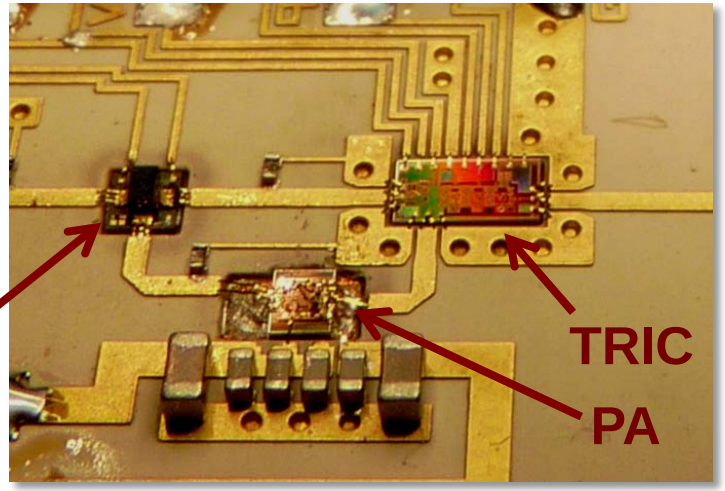

Digital Control and Power Supplies

- **Power Supply Module**
  - 2.5 V for antenna-board logic
  - 3.5 V for RF circuitry
  - 5.0 V for MEMS Driver Card
- **Digital Control**
  - Field Programmable Gate Array (FPGA) controls RF
  - Computer program: human interface for FPGA
- **Additional power supply for MEMS actuation (80 V)**

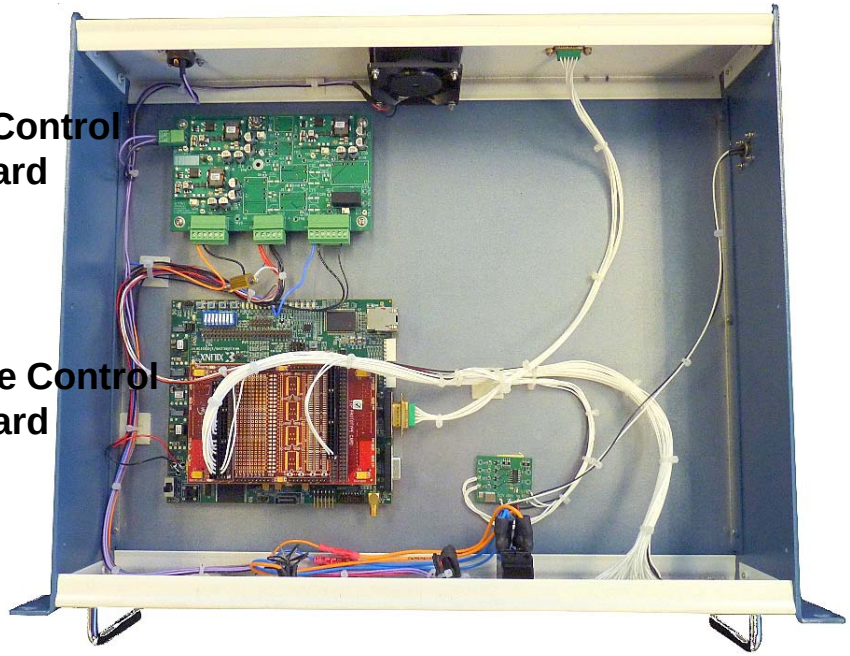

Performance Test: Measurement Setup

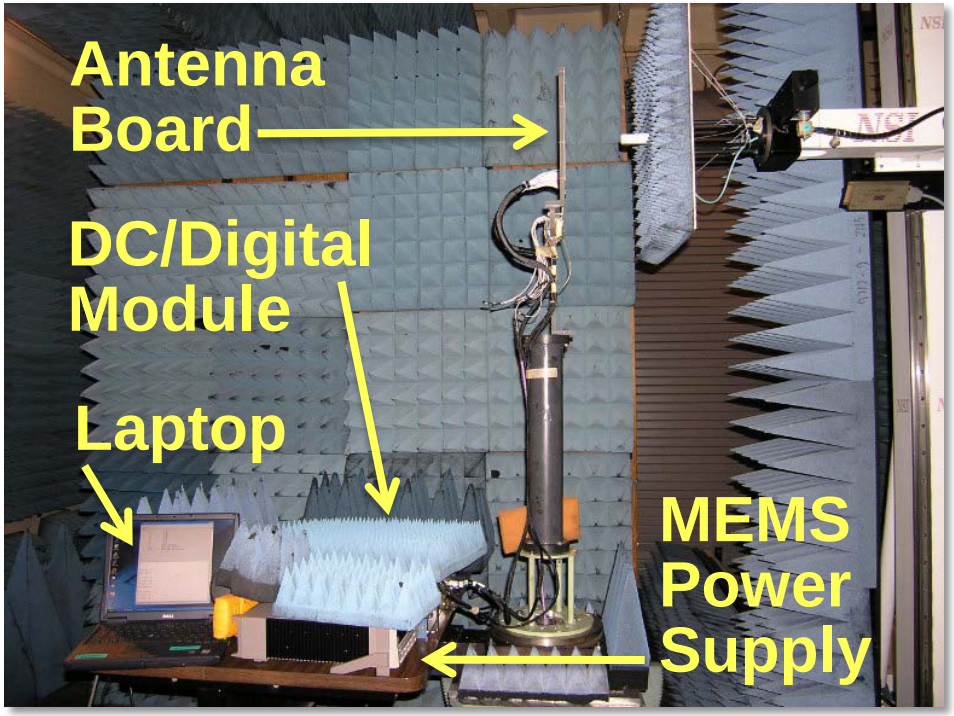

Fully Automated Anechoic Chamber

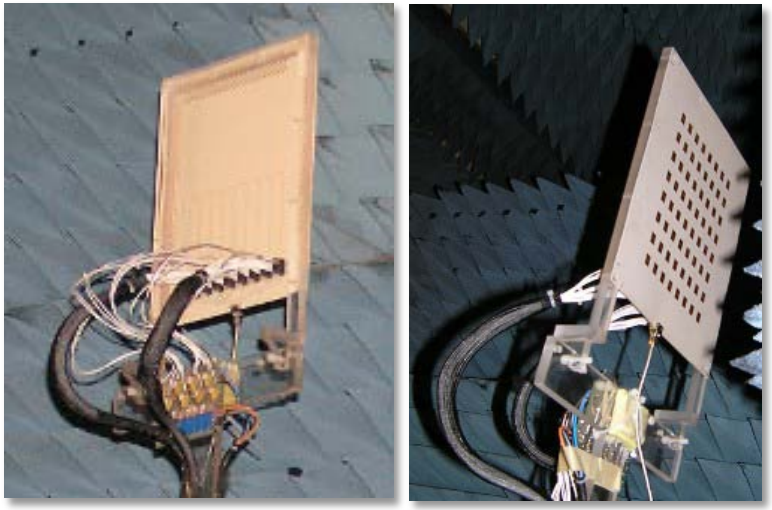

Antenna Board Mount

Measured Radiation Pattern at different Azimuthal Steering angles (Co-Pol, Rx)

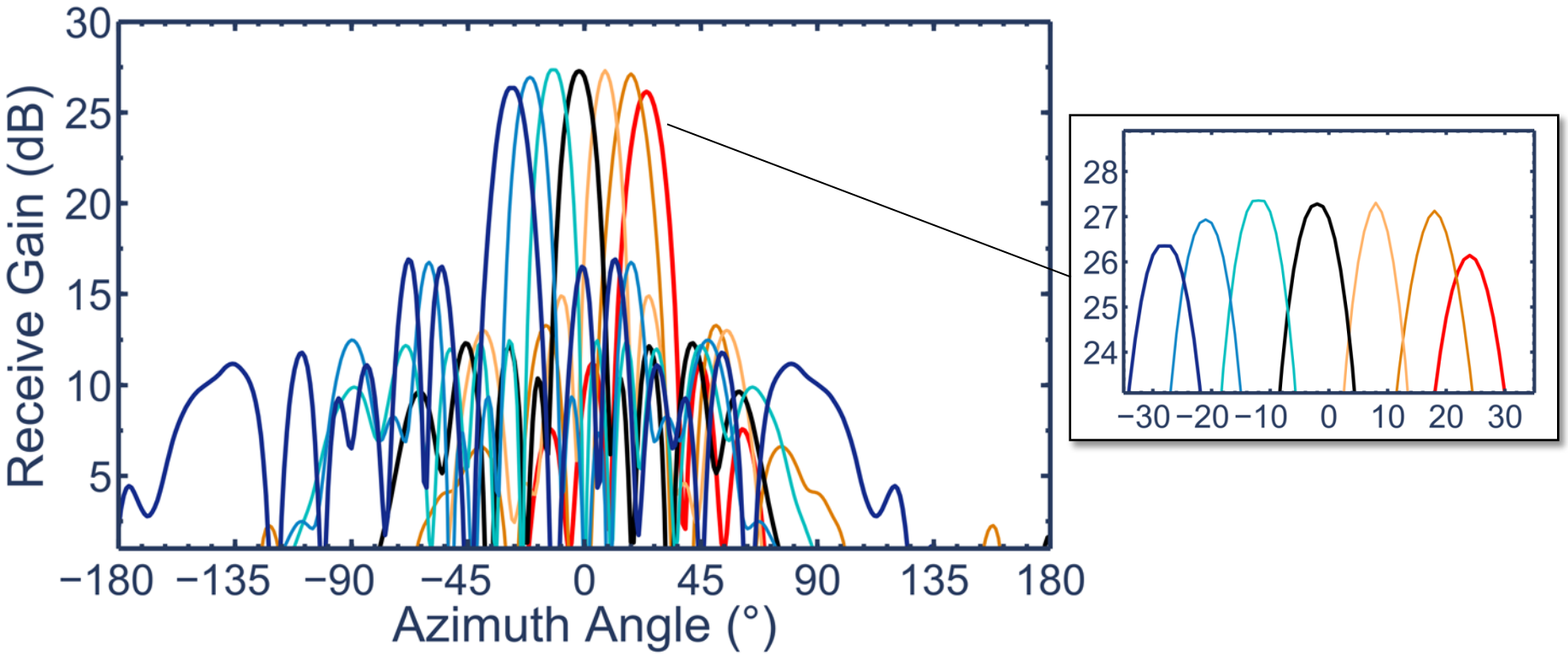

Measured Radiation Pattern at different Azimuthal Steering angles (Co-Pol, Tx)

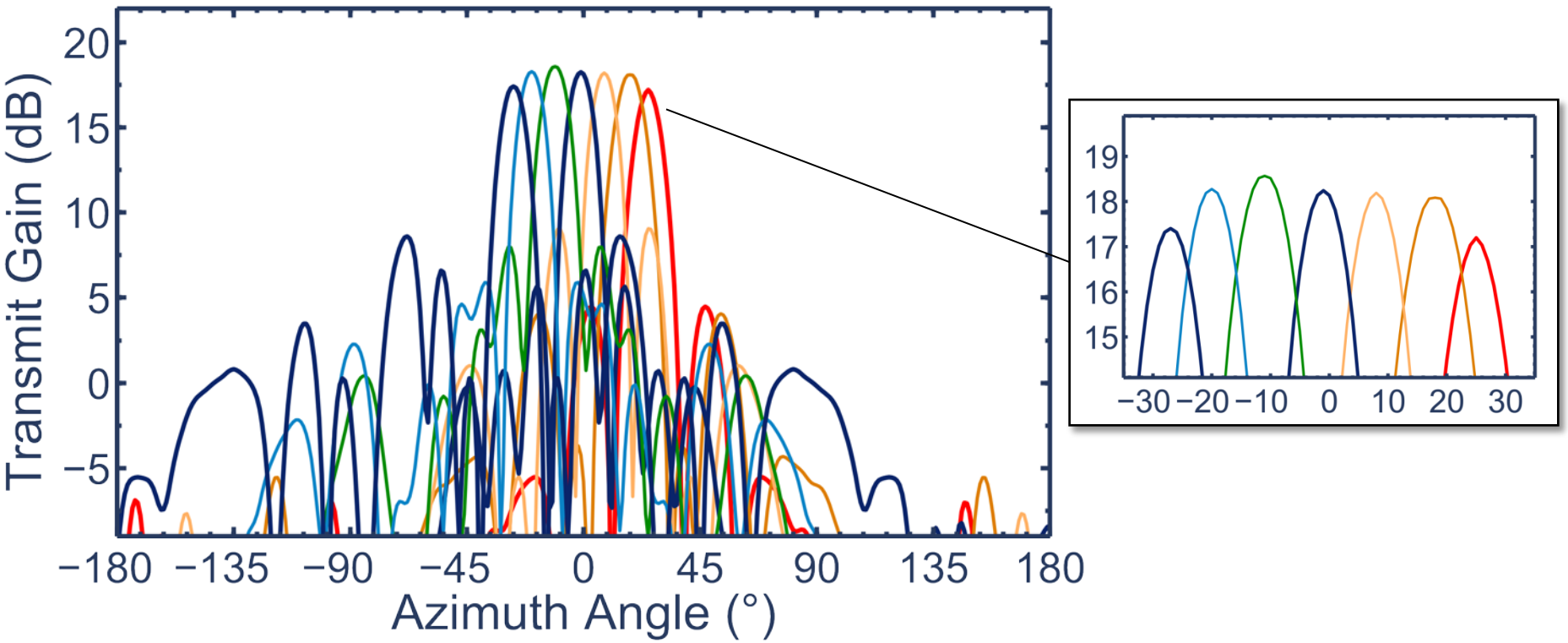

Phased Array Performance (1)

Elevation Scan Results

- 3 dB Beam Width at bore sight : 7.5° (Tx), 7.5° (Rx)
- Max. Side Lobe Level from Peak Gain:
  -12.81 dB (Tx)
  -12.65 dB (Rx)

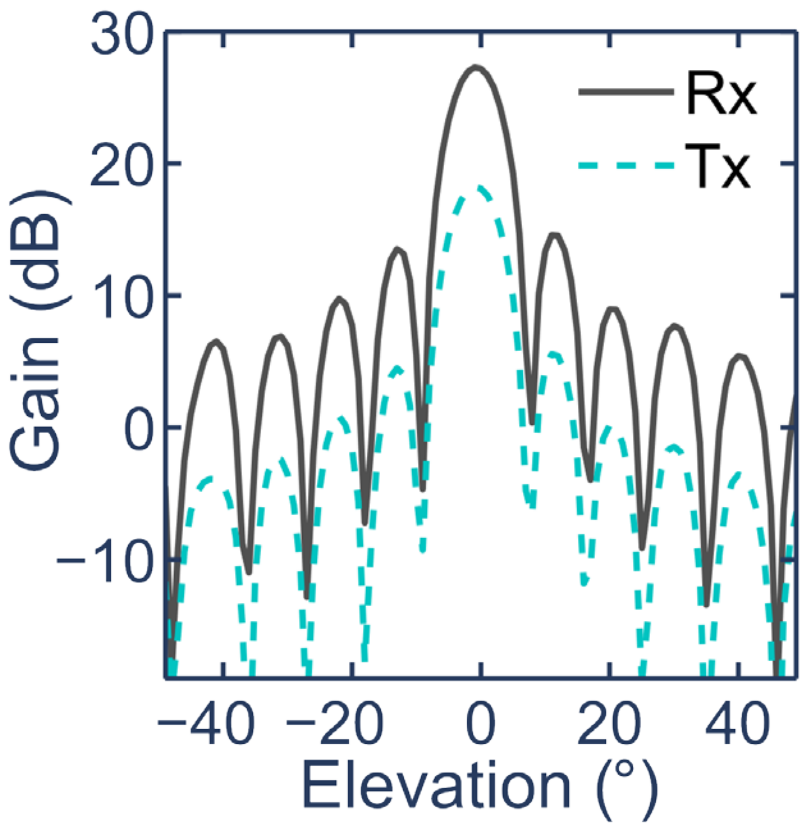

Phased Array Performance (2)

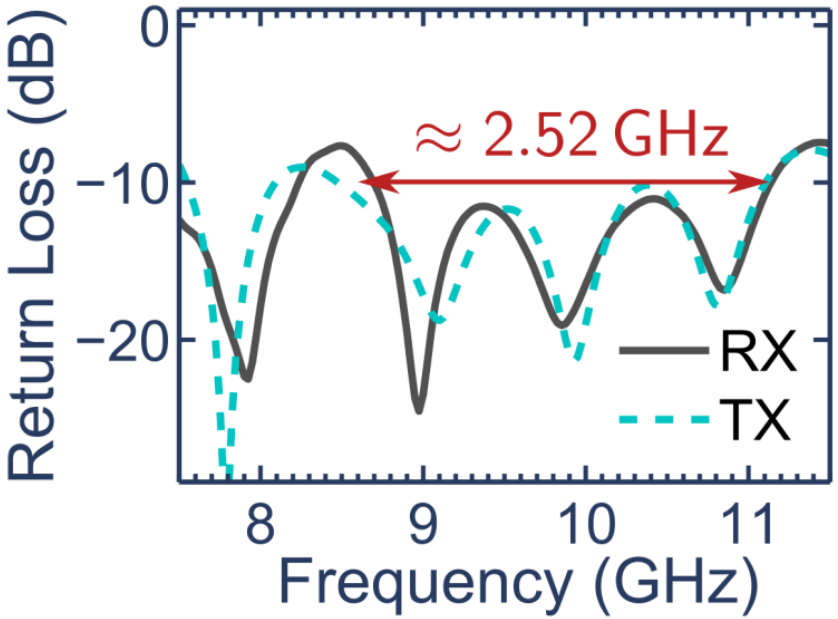

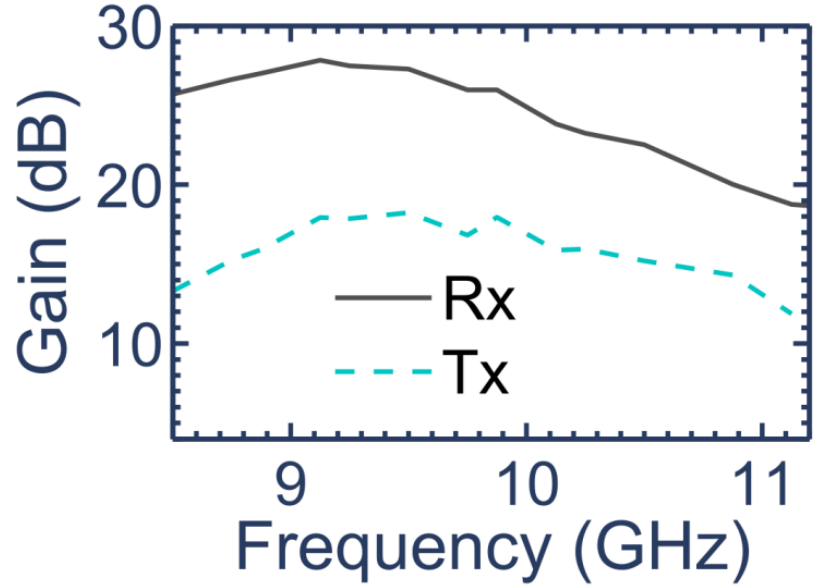

- **Antenna bandwidth:**
  2.430 GHz (Rx)
  2.625 GHz (Tx)
  2.52 GHz (Average)

- **Bore sight gain at 9.5 GHz:**
  27.28 dB (Rx)
  18.24 dB (Tx)

Phased Array Performance (3)

Parameter	Measured (Rx)	Measured (Tx)
Bandwidth	2.430 GHz	2.625 GHz
Beam-Steering Range	± 28.0°	± 28°
Energy Consumption	601.3 mW	
Max. Cross-Polarization level	<30 dB	<30 dB
Estimated EIRP	--	41.33 dBm

Embedded design (under way)

- Wire Bond Package
  - 2-D packaging
  - Convenient
  - High parasitic inductance

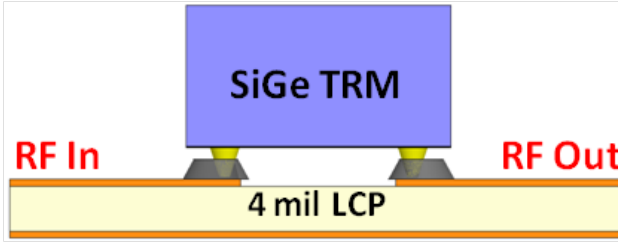

- Standard Flip-Chip Package
  - Reduced parasitics compared
  - Increased I/O density
  - Smaller footprint

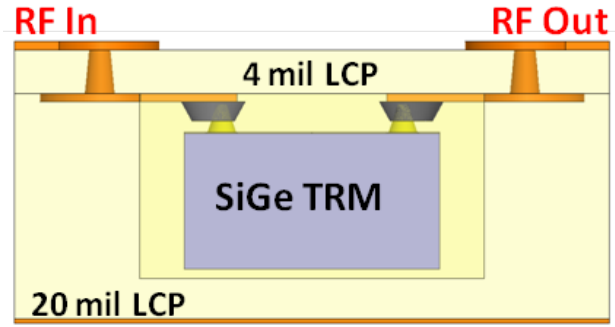

✓ Embedded Flip-Chip Package
  - 3-D packaging
  - Near Hermetic
  - Low form factor

Substrate Stack-up showing IC placement

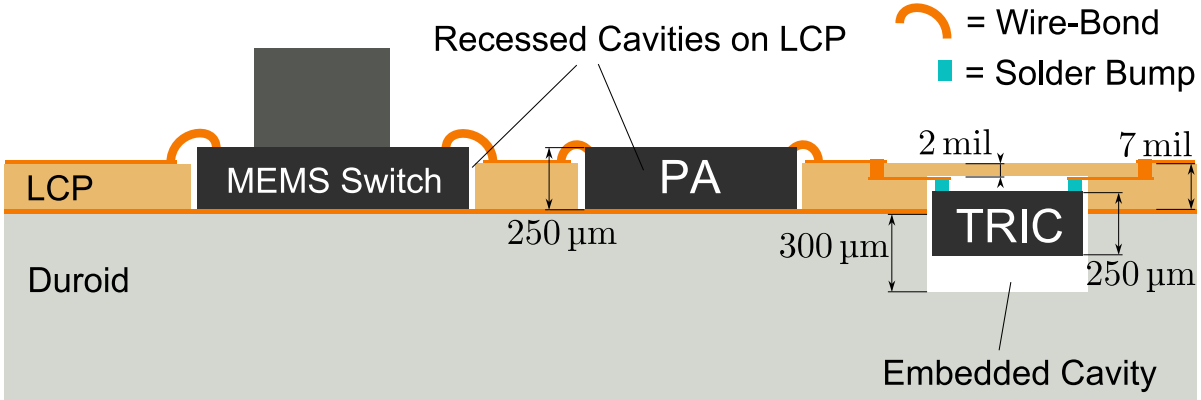

8x8 Transmit Receive
32 Embedded T/R SiGe chips

Flip-Chip Package Comparison (1)

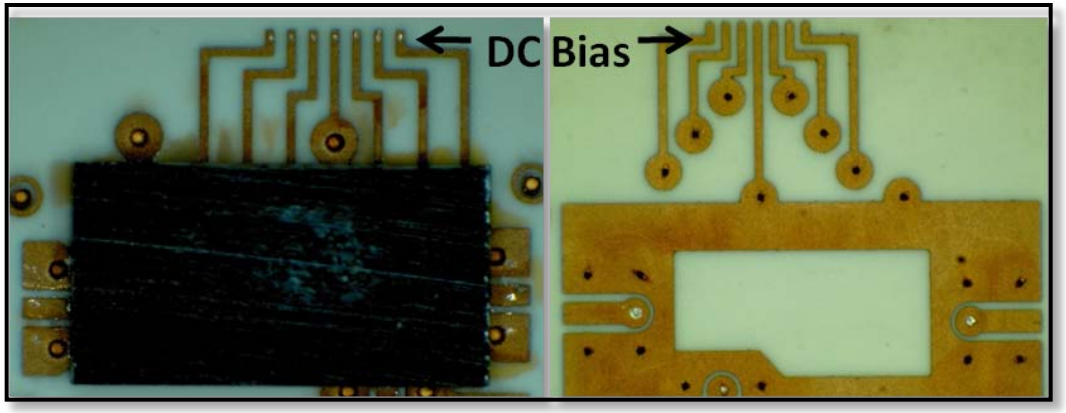

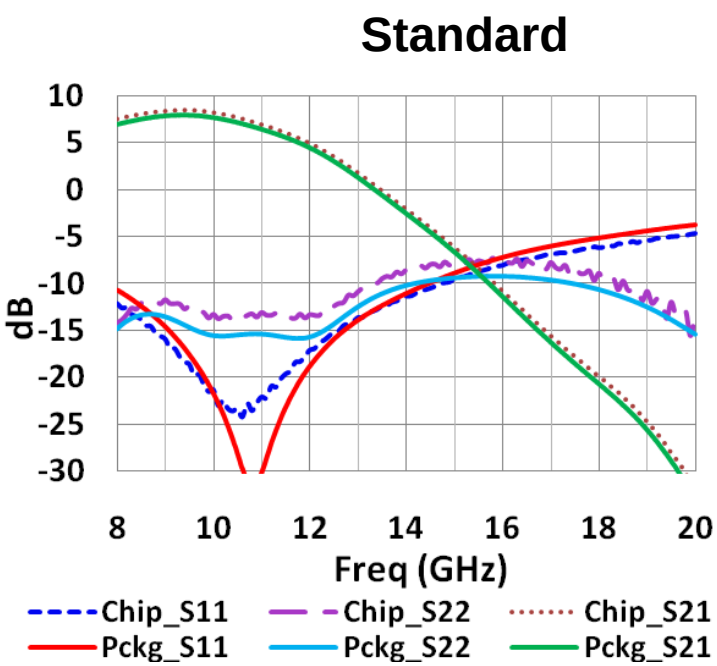

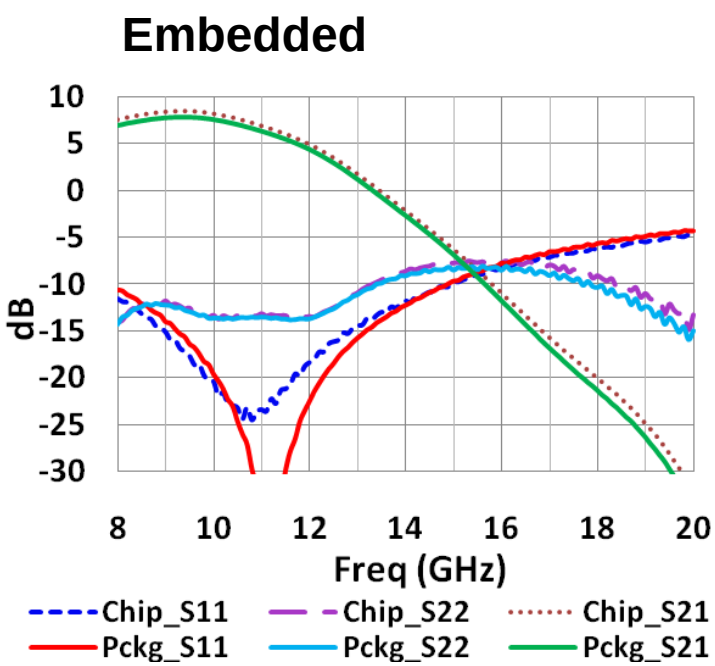

Flip-Chip Package Comparison (2)

- Flip-Chip Package
  - Negligible change in return loss
  - 0.4 dB added loss from FC interconnects

- Embedded Flip-Chip Package
  - Negligible change in return loss
  - 0.6 dB added loss from FC interconnects and via transitions
  - 0.3 dB increase in NF correlates to input package loss
  - Minimum and 50 Ω NF show package is well matched

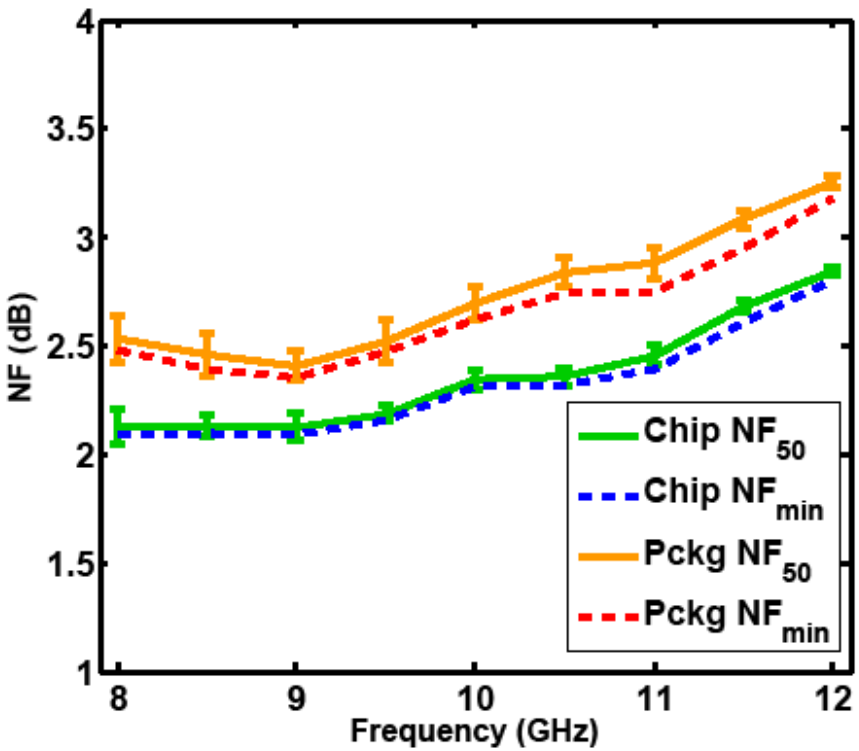

RF Back-End Development

Tx Stage 1

Tx Stage 2

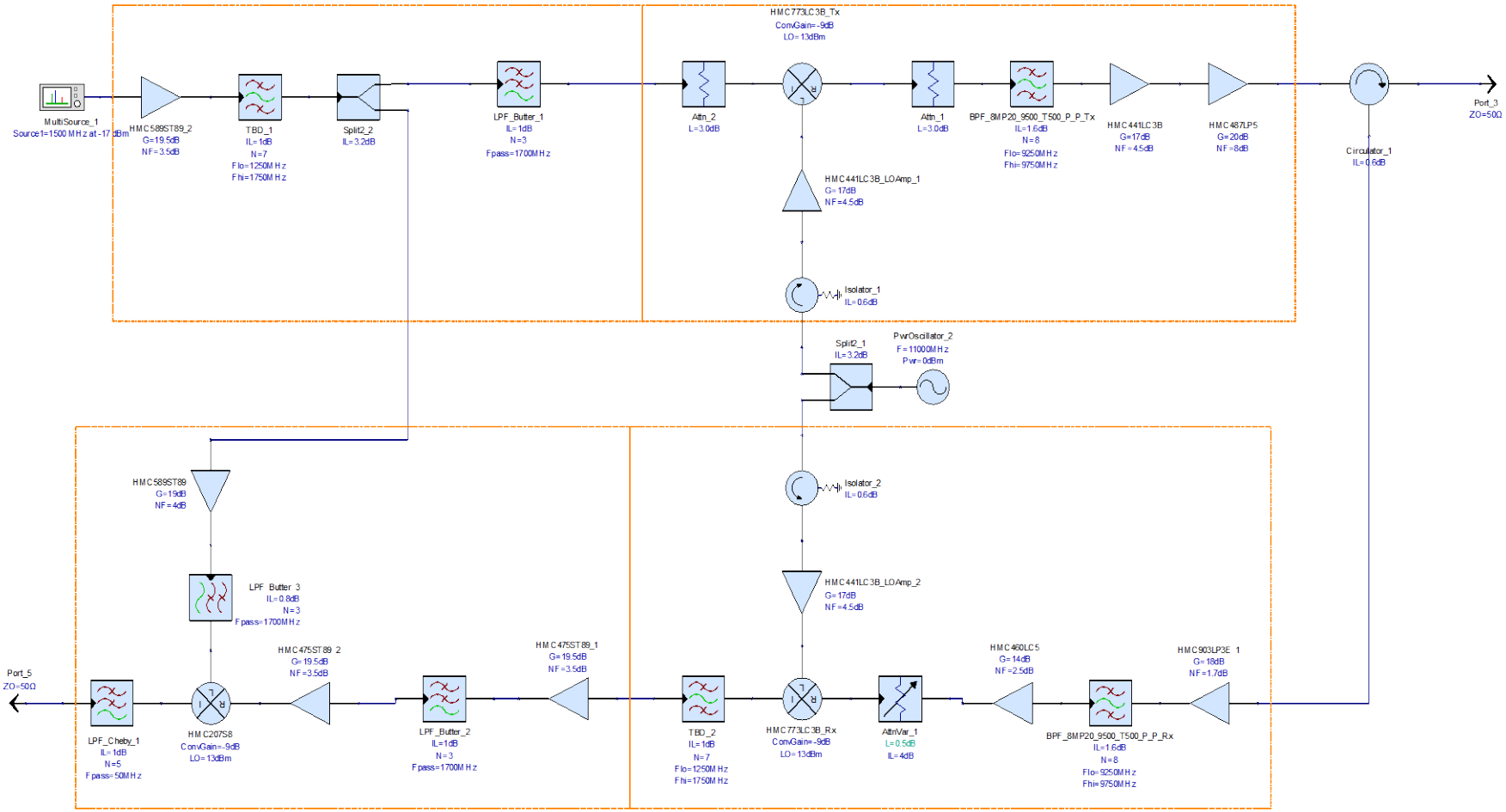

Rx Stage 2

Rx Stage 1

RF Back-End Boards

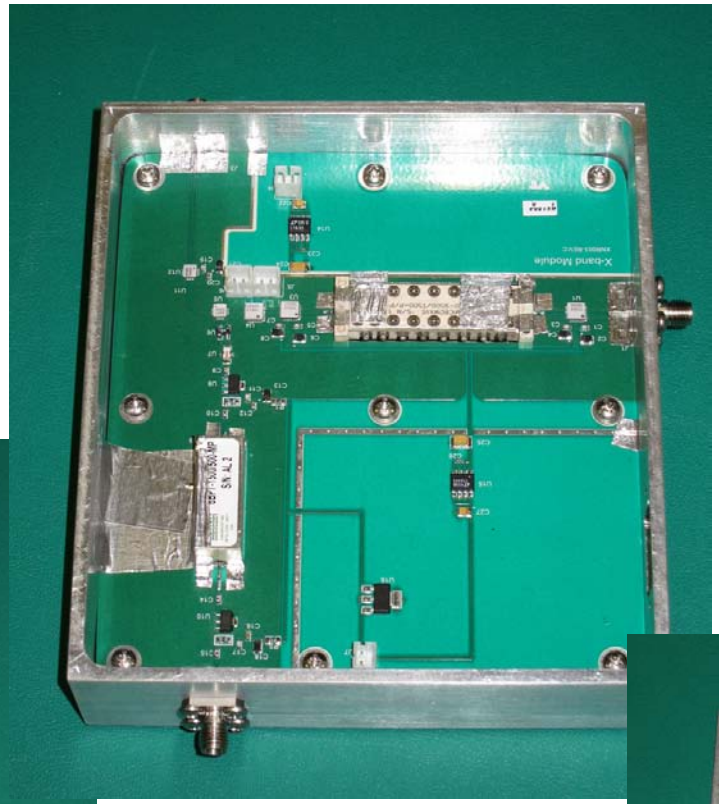

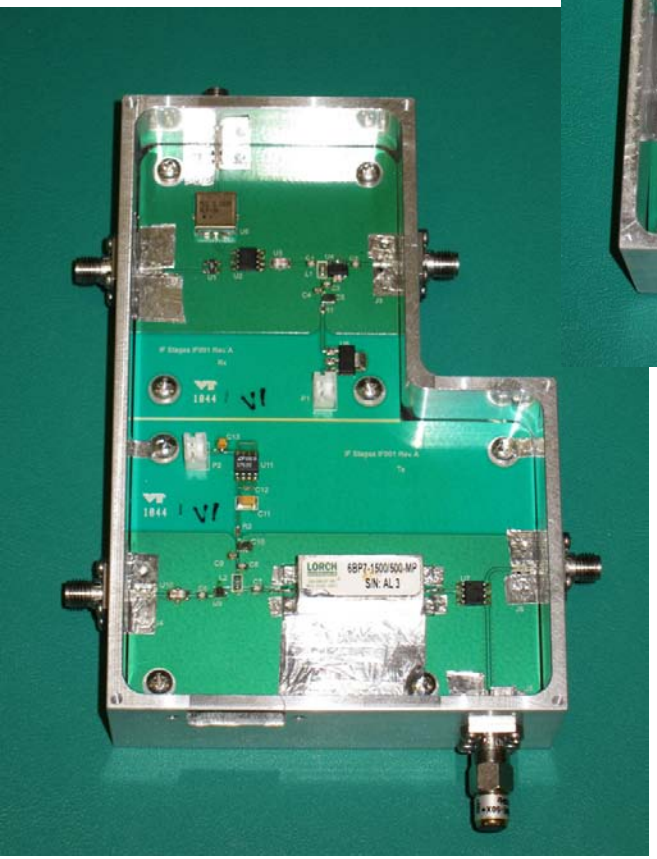

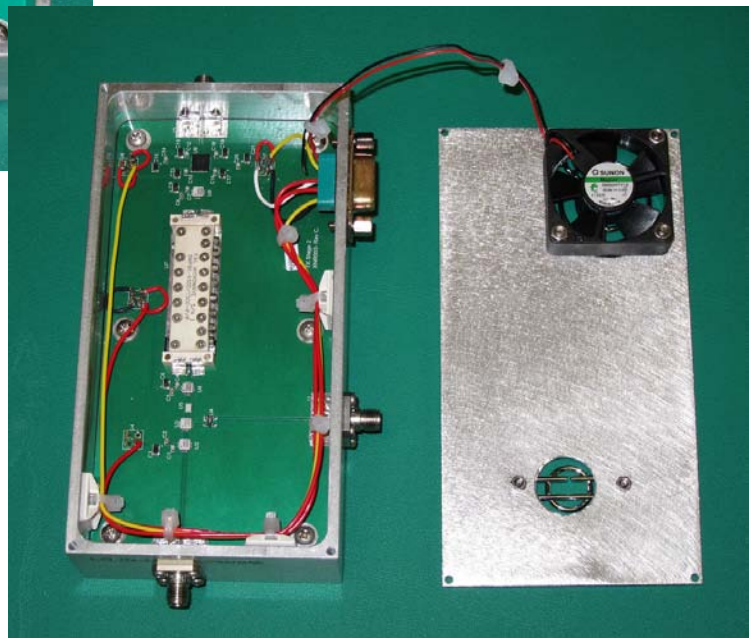

Summary

- **The T/R operation of an organic 64-element phased array was demonstrated for the first time using SiGe ICs at 9.5 GHz.**

- **Measurements showed:**
  - Rx gain of 27.28 dB
  - Tx gain of 18.24 dB
  - Beam Steering of 60 degrees
  - EIRP of 41.33 dBm

- **Further research will focus in bringing SiGe ICs closer to the patch antennas through innovative Packaging Techniques**

Thank You

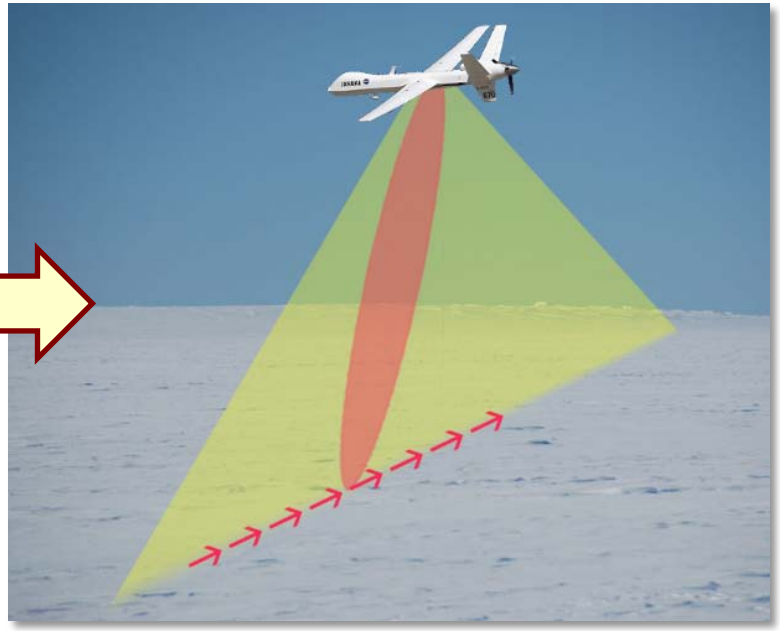

Questions?