Mineral and Gas Identification Using a High-Performance Thermal Infrared Imaging Spectrometer

Dr. Jeffrey L. Hall
Space Science Applications Laboratory
Physical Sciences Laboratories
The Aerospace Corporation

NASA ESTF Conference
22 June 2011

Outline

- Motivation
- Trade studies
- MAGI sensor concept
- Project status

Project Background

- Scope of the MAGI IIP includes an airborne sensor demonstration and a space-based sensor concept design

- MAGI (Mineral And Gas Identifier) is the airborne demonstrator sensor designed to support a satellite sensor concept
  - *Operates in the thermal IR (7-12 micron) spectral region*

- MAGI is a precursor to “MAGI-L” (MAGI-LEO)
  - *Analyses performed on MAGI will be extrapolated into the MAGI-L concept as part of the IIP, including an assessment of space-qualified elements*

- MAGI builds upon the ASTER concept to provide improved measurements and incorporate state-of-the art technology for future Earth-observing instruments

Relevance to Decadal Study

- Multi-spectral satellite thermal IR sensors have been used in the following areas:
  - *Volcano monitoring*
    - Impending eruptions
    - Gaseous and particulate effluents
  - *Rock and soil identification*
  - *Surface temperature monitoring (drought and evapotranspiration studies, urban heat islands)*

- MAGI-L will also be used to detect gas emission from large sources
  - *Volcano monitoring (sulfur dioxide)*
  - *Pollution monitoring (ammonia from biomass burning and livestock operations, sulfur dioxide from power plants)*
  - *Ozone depletion (methyl chloride from biomass burning)*

Additional Benefits of MAGI-L over ASTER

- More accurate pixel temperature and emissivity retrieval
  - *Use in-scene atmospheric compensation methods*
  - *Detect "contaminating" thin cirrus at night, when SWIR cannot*
- Improved discrimination between minerals
  - *Due to more spectral channels*
- Improved discrimination of volcanic emissions
  - *Sulfur dioxide, and ash and sulfate particulates*
- Detect smaller thermal anomalies
  - *Due to smaller pixel size*
- Shorter revisit time
  - *Due to larger swath width*

Key MAGI Components

- Dyson spectrometer
  - *Small optical distortion at low f-numbers*
- High frame rate HgCdTe focal plane array
  - *Any suitable detector material could be substituted as it becomes available*
- Field-splitting mirror assembly
  - *Doubles the swath width (→ decreases revisit time)*
  - *Provides redundancy*
- Cryocooler for FPA and spectrometer housing
  - *Space qualified/available technology*

Mineral Mapping – Cuprite, NV

Dominant Endmember Distributions

32 Bands

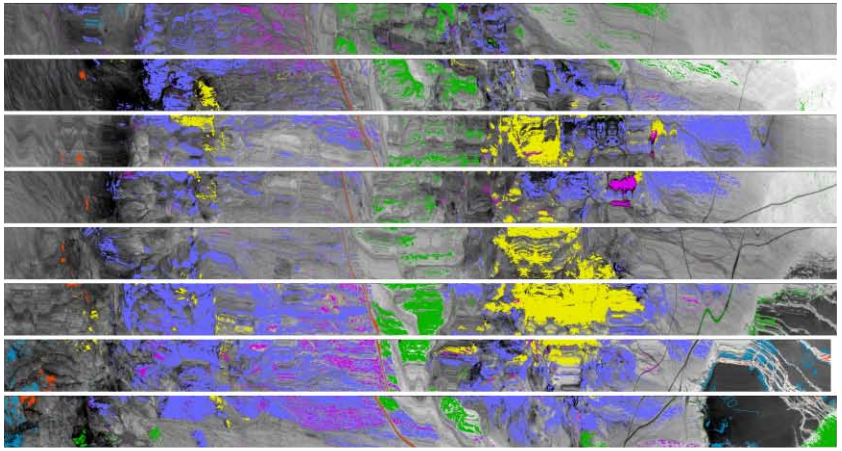

16 Bands

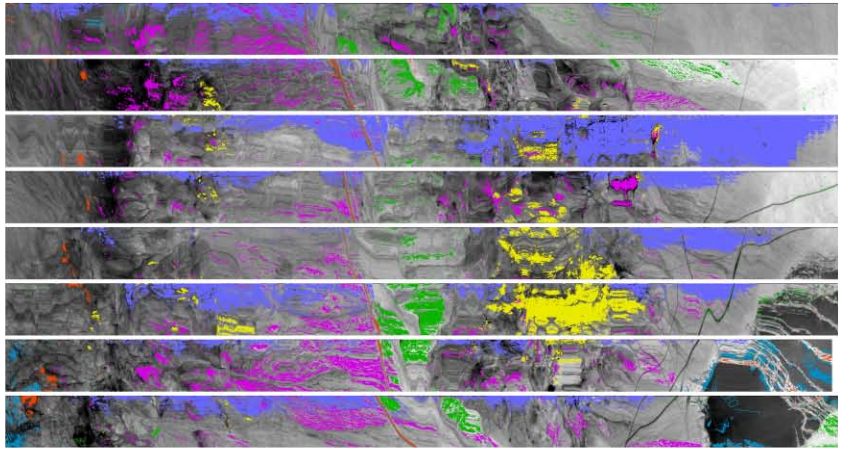

ASTER

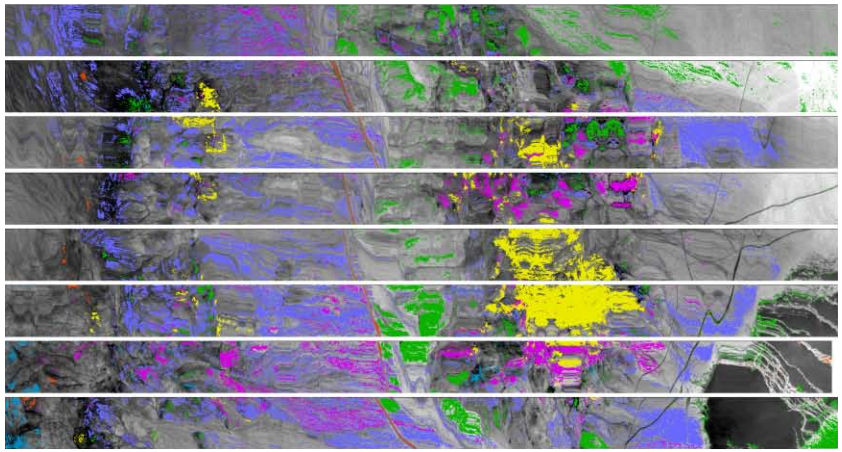

- Red Quartzite
- Glauconitic Sandstone
- Grey Quartzite
- Grey Slate
- Phyllite
- Oolitic Limestone

> At 16 or fewer bands, the mineral mapping changes significantly

AEROSPACE

Gas, Mineral and ISAC Studies Combined

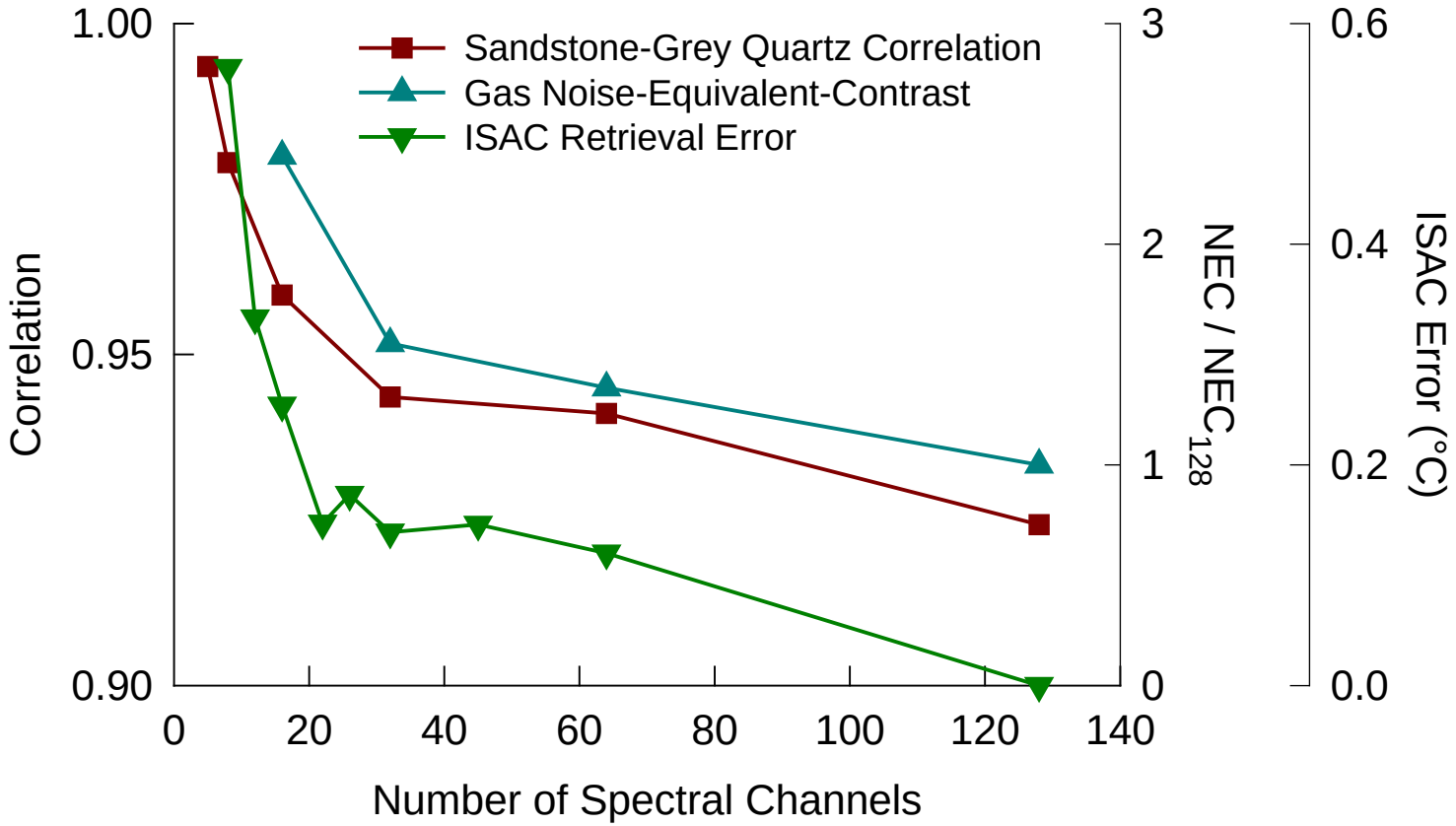

> All the studies show an appreciable performance penalty in changing from 32 to 16 channels (0.19 to 0.38 μm sampling)

AEROSPACE

Trade Study Summary

Study	Short Wavelength Cut-off	Long Wavelength Cut-off	Bandwidth (microns)	NEDT (°C)	GSD (m)
Gas Detection	7.2	12.0[1]	≤ 0.19	0.1	45
Mineral Detection	7.8	12.0[1]	≤ 0.19	—	—
Atmos. Comp.	7.5	12.0[1]	≤ 0.25	—	—
Cirrus Detection	7.0	—	—	—	—
Summary	**7.0**	**12.0**	**0.19**	**0.1**	**45**

[1] To minimize detector noise and maximize operability, keep this as low as possible. Analysis showed that in all cases, a 12-micron cut-off does not appreciably affect performance.

A mean bandwidth of 0.19 from 7 to 12 microns results in 28 spectral channels

MAGI-L Specifications – Comparison to ASTER

	ASTER	MAGI-L
No. Bands	5	28
GSD (m)	90	60
Swath Width (km)	60	200
NEDT (^{o}C)	0.2	0.1

- MAGI-L will use a 240 mm (9.5”) diameter telescope (similar to ASTER)

MAGI-L Wavelength Bands

Comparison to ASTER, MODIS and proposed HyspIRI

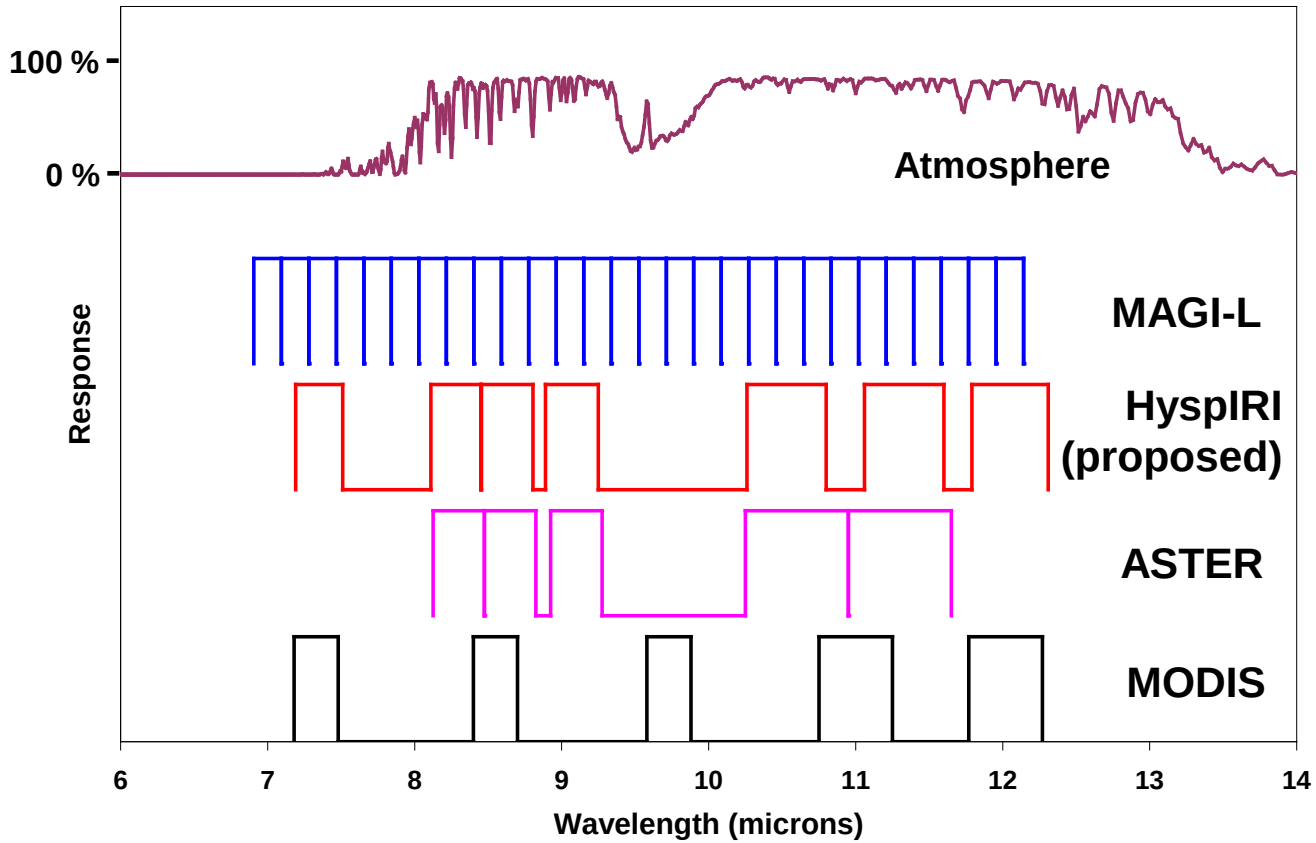

- MAGI-L does not have preconceived notion of “best” wavelengths
- It will provide a unique test-bed to make that determination
- It does cover wavelengths of previous sensors to provide data continuity

AEROSPACE

Satellite End-to-End Sensor Concept

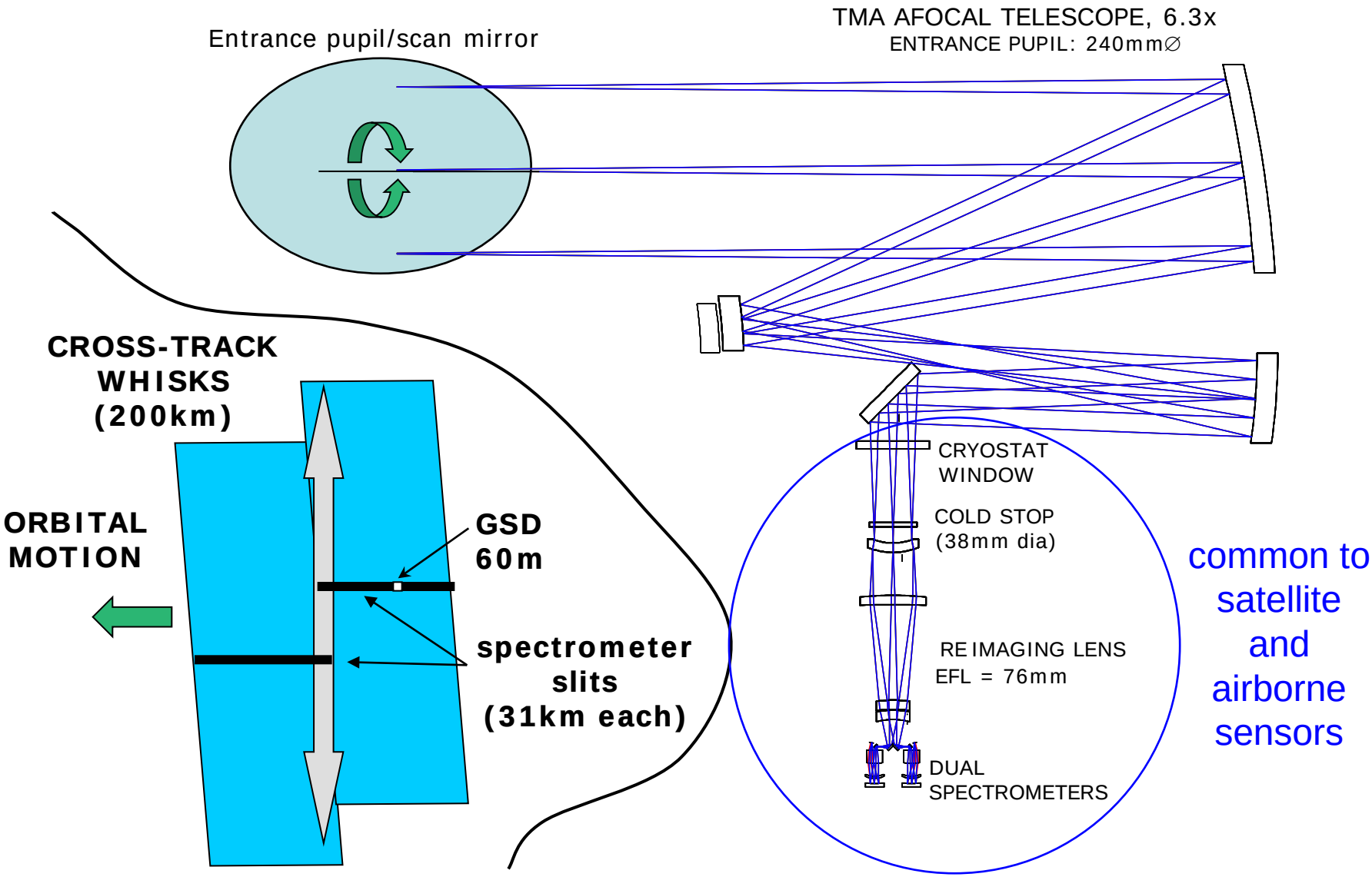

AEROSPACE

MAGI Airborne Sensor

- Build in July
- Flights in August

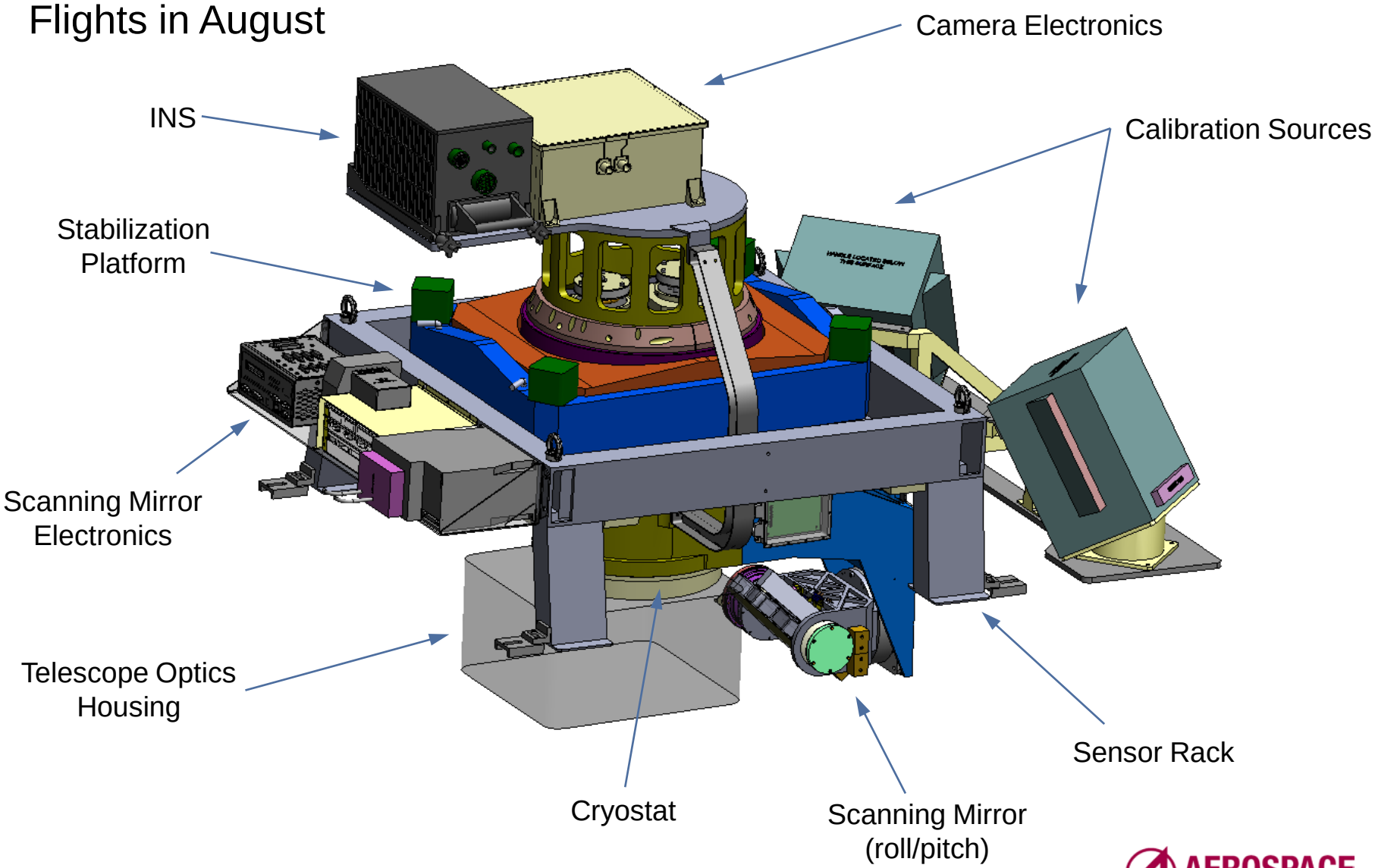

AEROSPACE

Cryostat Assembly

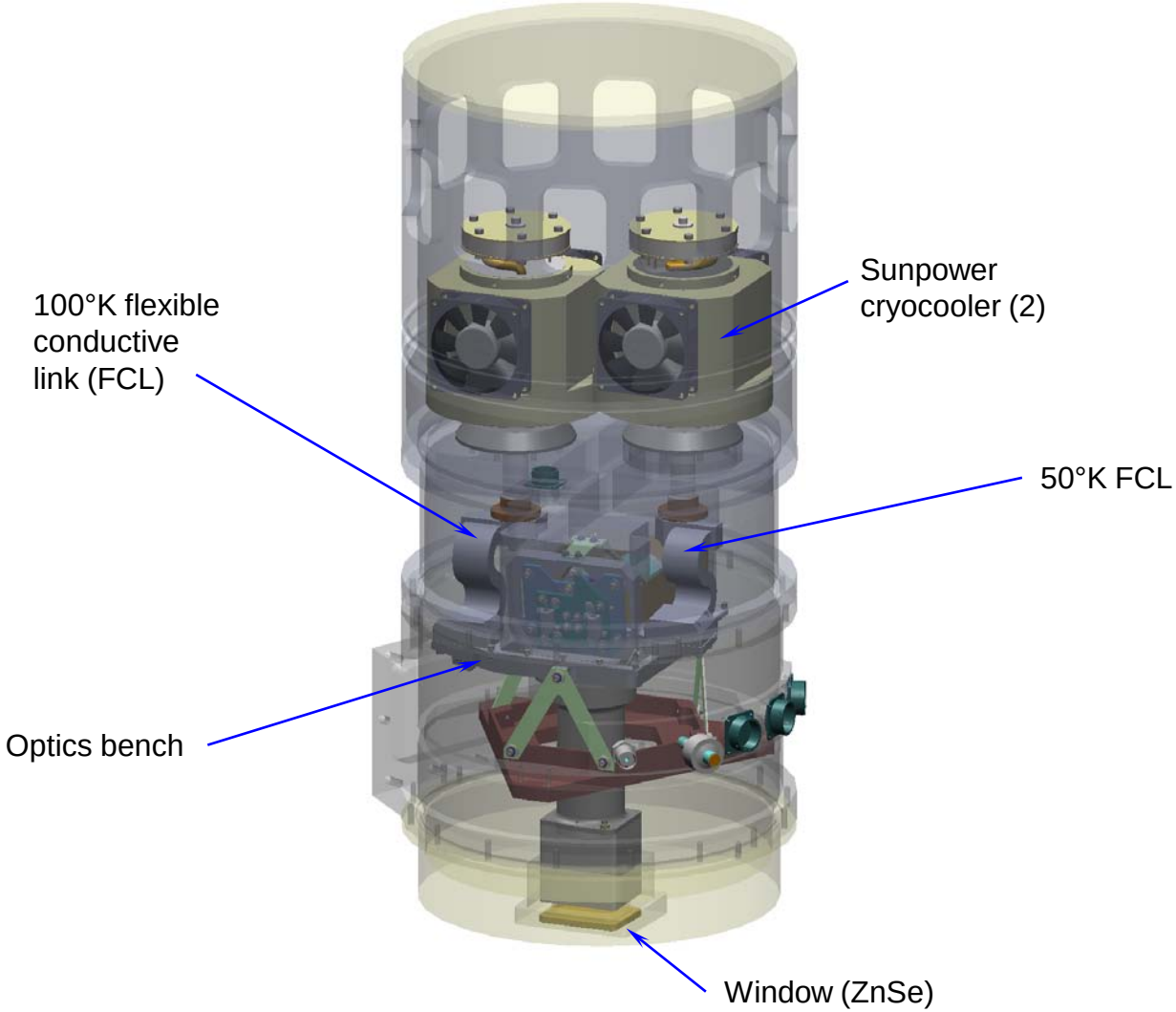

AEROSPACE

Optics Bench

- Structural parts are aluminum and fiberglass construction

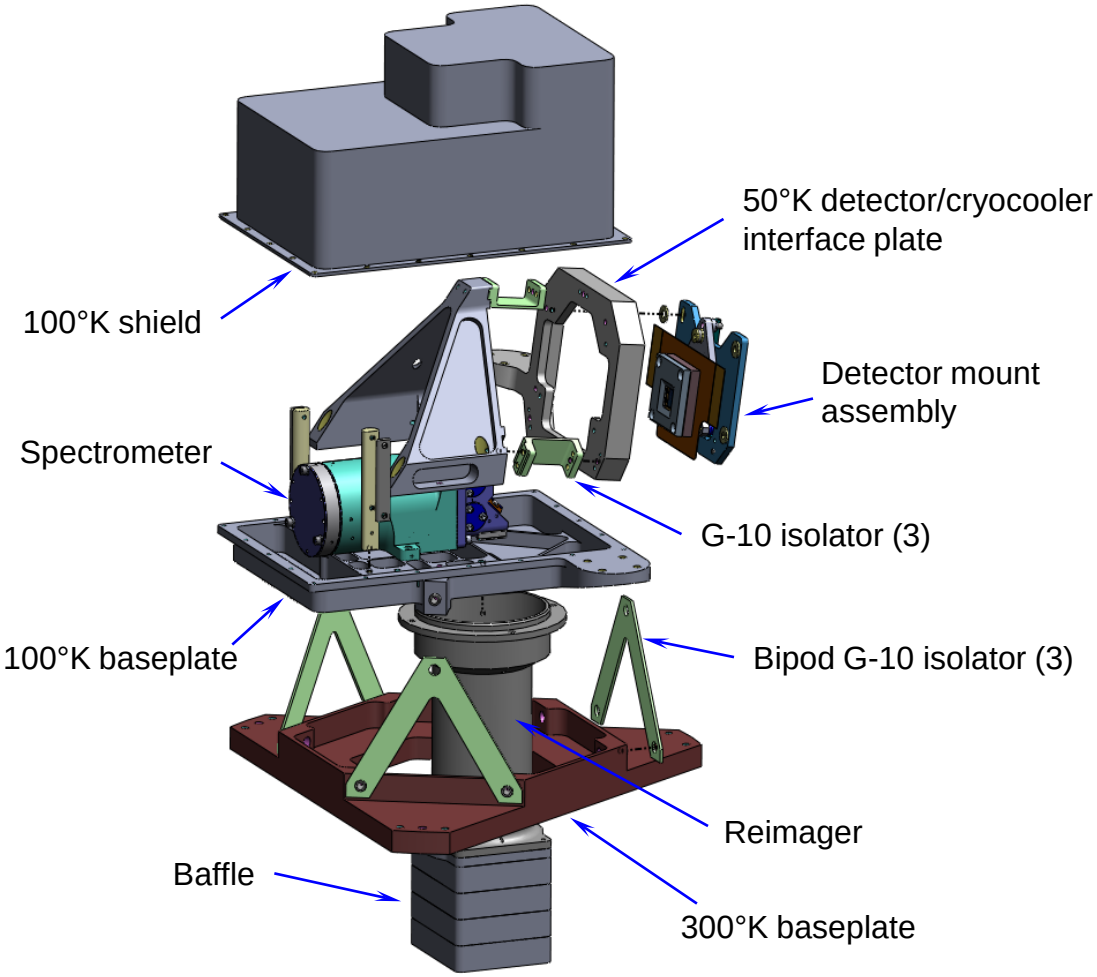

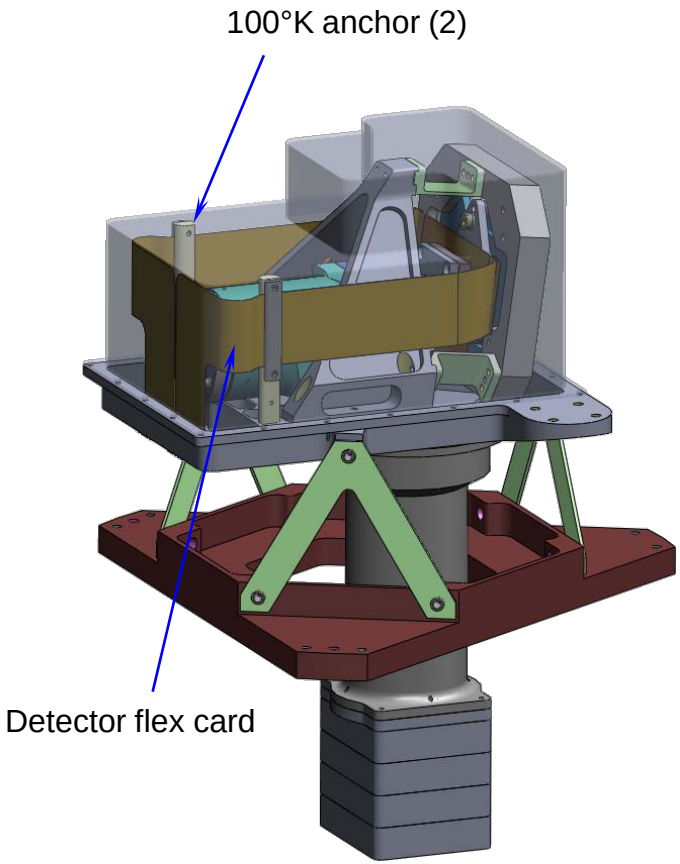

AEROSPACE

Dyson Spectrometer

Manufactured by Corning Specialty Materials

- Predicted performance
  - *Grating: 97% max. efficiency in 1st order (9.0 µm), 72% min. (7.0 µm)*
  - *Distortions: smile 0.025 pixels, keystone 0.035 pixels*

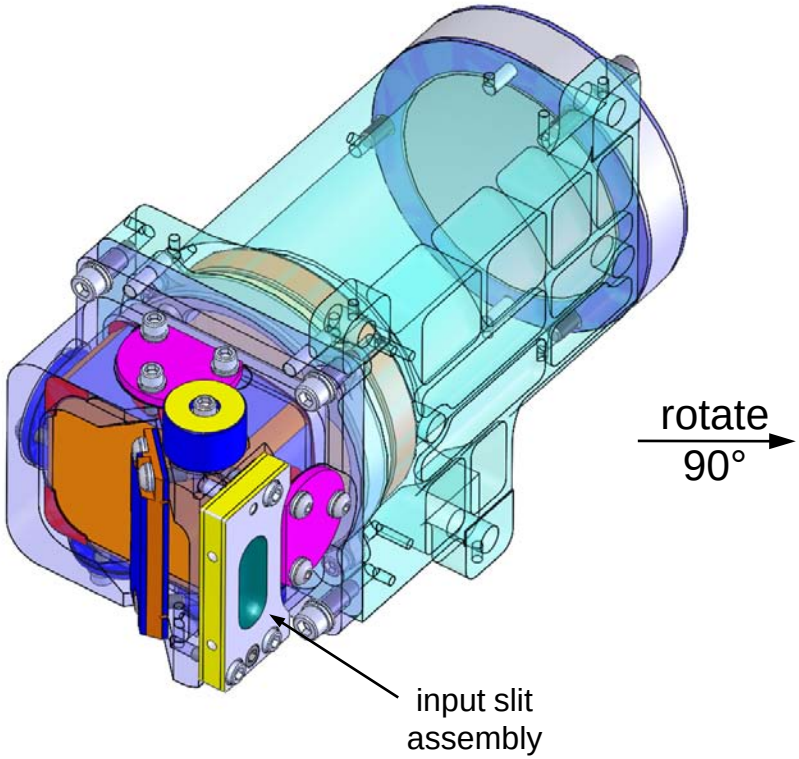

AEROSPACE

Cryocooler Testing – Sunpower Stirling CT Model

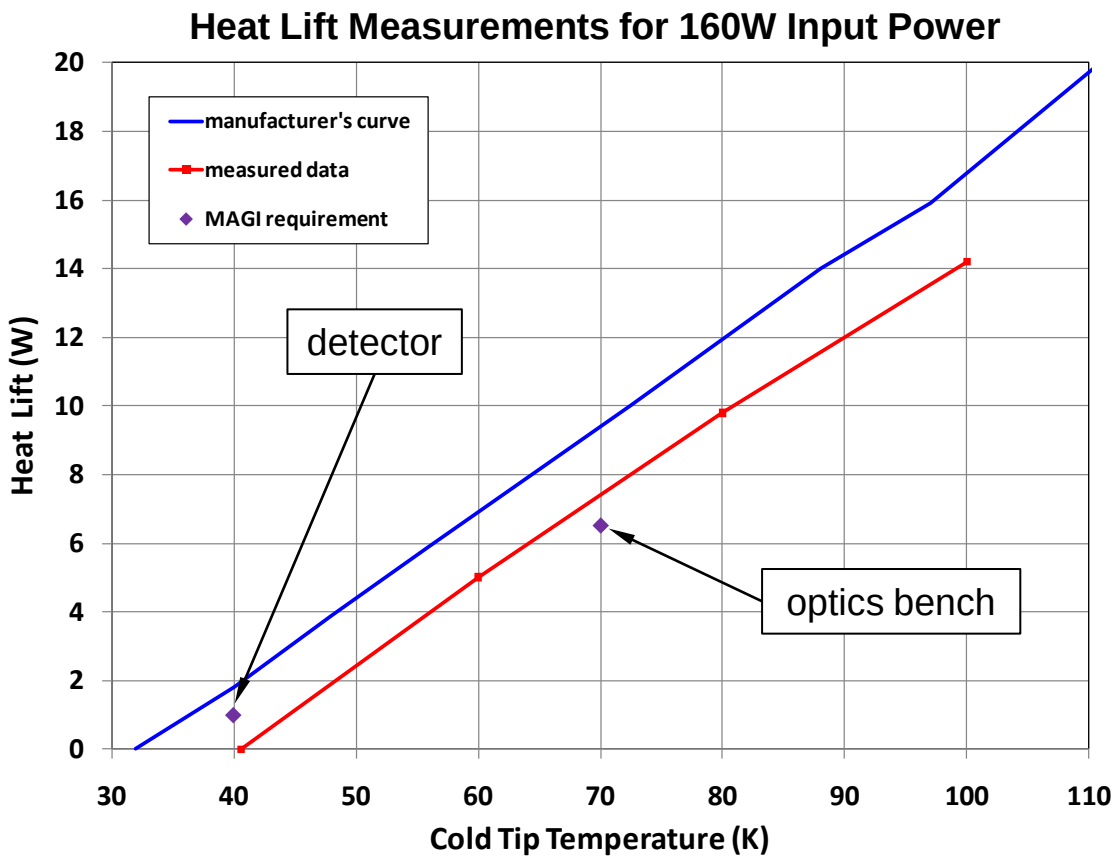

- Measured heat lift curve in MAGI test environment was lower than expected
- Performance insufficient for predicted detector cooling requirement

> CT cooler will work for optics bench, not for detector. Use GT instead.

AEROSPACE

Status of Project

- Received all optics and cryocooler parts
- Waiting on remainder of mechanical parts
- Cryocooler testing and thermal control software complete
- Software mostly complete
- Lab integration to begin in July
- Aircraft integration planned for August
- Flights planned over regions visited by The Aerospace Corporation's Mako sensor (same GSD, higher spectral resolution)
  - *Salton Sea*
  - *California Central Valley*

Acknowledgements

- Science Team
  - *Stephen Young*
  - *Kerry Buckland*
  - *David Tratt*
  - *Michael Ramsey (Univ. of Pittsburgh)*
- Engineering Team Leads
  - *David Gutierrez (Systems Engineer)*
  - *David Warren (Optics)*
  - *Nery Moreno (Electronics)*
  - *Mazaher Sivjee (Mechanical)*
  - *Sonny Yi (Thermal)*
- Project Manager
  - *Don Pedrino*

This work was supported by NASA's 2007 Instrument Incubator Program