Large Aperture, Solid Surface Deployable Reflector

Robert Taylor and Dana Turse
Composite Technology Development (CTD)
2600 Campus Dr, Lafayette, CO 80027

Abstract- **The goal of this NASA Advanced Component Technology (ACT) program is to develop a large aperture, solid surface deployable reflector for earth science applications. This type of reflector offers a continuous graphite composite reflector membrane that is formed as a parabolic surface having sufficient accuracy for RF science measurements at high frequencies (Ka-band and beyond). By using a continuous membrane, these reflectors also provide a clean aperture for consistent data across the field of view. Over the past year, significant progress has been made towards the validation of this technology through the fabrication and testing of a full-scale Engineering Development Unit (EDU). This paper will describe the EDU hardware and the results of testing. As a parallel effort over the past year, CTD has been working with a team out of The California Institute of Technology's (Caltech) Jet Propulsion Laboratory (JPL) to develop a conceptual design for a deployable reflector for the ACE mission. The results of this conceptual study are also discussed.**

1. INTRODUCTION

NASA has been challenged to gather data from space to help achieve a grand vision as stated in the decadal survey: "*Understanding the complex, changing planet on which we live, how it supports life, and how human activities affect its ability to do so in the future is one of the greatest intellectual challenges facing humanity [1].*" This requires a complete enough picture of Earth to allow climate scientists to accurately follow the energy balances and processes of the atmosphere, oceans, ice, and land and see how they interact. Achieving this vision requires gathering precise data from space using all currently available means, improving the quality and resolution of almost all measurements, and also measuring the Earth in completely new ways.

Many of the measurements required for the decadal survey and for later missions require active and passive RF sensors. This includes measurements for cloud height, glaciation height, wind speed and direction, precipitation, snowpack accumulation, snowpack water content, soil moisture, and freshwater surface level. Just like a larger fishing net catches more fish, a larger RF aperture gathers more energy, enabling higher spatial resolution, higher signal-to-noise, or lower operating power for the same measurements. The TEMBO® solid-surface deployable reflectors being developed by CTD provide a new, accurate means of deploying large RF apertures to meet the goals of future missions.

2. TECHNOLOGY ROAD MAP

Like any other complex subsystem, the large aperture, solid-surface reflector is actually a collection of key "building block" technologies that are gathered into a unique design based on specific requirements for a mission. Identifying these key technologies, evaluating their maturity and requirements, and advancing them sufficiently for a given mission is a complex task. The technology roadmap is a tool for working through this task and preparing the technology for insertion into specific missions.

The technology roadmap for the large aperture, solid surface deployable reflector is also complicated by the fact that it is a cross-cutting technology with a number of different flight applications. In addition to RF earth science measurements, the deployable reflector technology could also be used for commercial broadcast satellites, point-to-point communications, and military radars. The basic configuration for each of these applications is different, requiring a slightly different collection of the building block technologies. The deployable reflector roadmap presented in Fig. 1 shows the building block technologies under development, the TRL status of those technologies, and how those technologies are pieced together for a variety of application paths.

The application path discussed extensively in this paper is the uppermost path in Fig. 1, shown as ACE. The specific sensor requirements being pursued for the ACE mission are for ACERAD, an advanced cloud profiling, dual frequency active radar. The technologies to be developed for ACERAD are dominated by the surface accuracy requirement to operate at 94 GHz. Therefore, large portions of the ACERAD reflector must be rigid; which is a significant departure from CTD's previous center-fed and offset-fed reflector designs consisting of a uniformly thin membrane that can be continuously pleated for maximum packaging efficiency. The ACERAD design is still reliant on some flexible sections of the reflector surface to allow for stowage. Therefore, the technologies included on the roadmap for ACERAD include flexible shells, rigid sections, separable interfaces, and crossbeams.

The other application path discussed in this paper is the second path shown on the roadmap, Deployable Commercial Reflectors. This path represents not just commercial reflectors, but any other reflector operated up to Ka band that is packaged in one axis with a continuously pleated surface.

This research is sponsored by the Earth Science Technology Office, Advanced Component Technology (ACT) program, contract #NNX09AD57G.

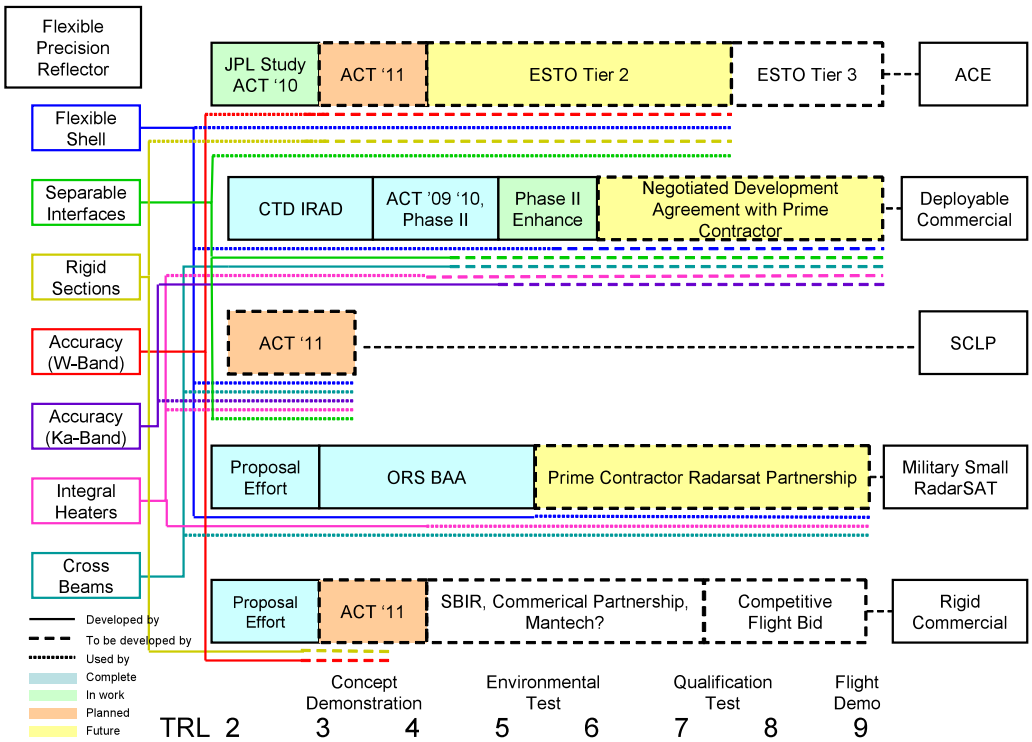

Fig. 1, Large Aperture, Solid Surface Deployable Reflector Technology Roadmap

Although there are no missions in the decadal plan that require a reflector with these characteristics, there are several past missions, including AQUARIUS and WindSat, that could have been designed with a larger aperture provided by this configuration. The EDU reflector discussed in this paper is of this configuration and is being used to validate several of the building block technologies, including flexible shells, separable interfaces, integral heaters, and crossbeams.

The original application path that first demonstrated the solid surface, deployable reflector is the path labeled on the roadmap as Military Small Radarsat. This path would also include center-fed reflectors for point-to-point communications in the 2.5m to 5m size range at up to Ka band. Reflectors in this class are on TDRS and are used by all current deep space missions for communications back to Earth. Center-fed apertures greater than 5m have been envisioned for some future deep space missions, but the additional building block technology advancements that would be required to enable this path are not shown on the roadmap.

The rigid commercial path shown on the roadmap is not a deployable reflector at all, or even a large aperture, but rather an adaptation of the building block technologies required on other paths. The surface accuracy requirement on the rigid sections of the ACERAD reflector are challenging enough such that meeting them requires an entirely new rigid reflector design. If successful, this design would become an application path of its own, and be competitive with rigid reflectors used for a wide variety of spacecraft, including commercial, military and civil. Progress on the rigid section technology is then dual purpose, advancing toward ACERAD and rigid reflectors simultaneously.

3. TEMBO® REFLECTOR OVERVIEW

CTD's deployable solid surface reflectors are similar to rigid graphite reflectors, consisting of a front reflective surface and deep backing structure, as shown in Fig. 2. All components are fabricated using thermally stable graphite composite materials and conventional fabrication techniques.

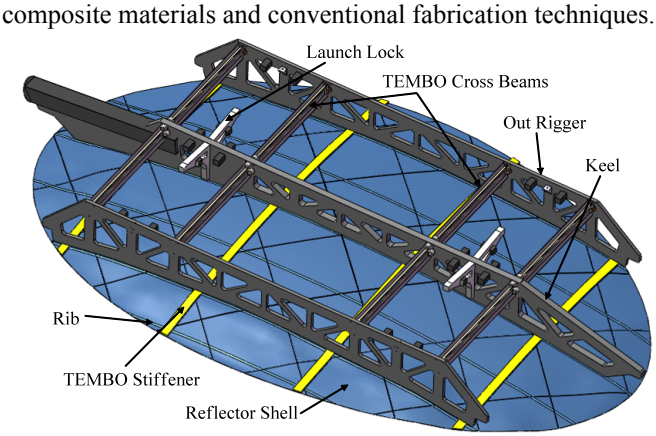

Fig. 2, Deployed 4m Solid Surface Deployable Reflector

The reflective surface, or reflector shell, is a thin, conventional carbon fiber laminate that can be bent into a series of pleats and packaged to 1/3 of its original width as shown in Fig. 3. The backing structure is formed from graphite composite honeycomb panels which run parallel to the pleats. These panels are connected by deployable crossbeams, which are installed perpendicularly to the panels. The crossbeams are formed into reversing bends to reduce the width of the backing structure by the same 1/3 ratio. The result

is a thermally stable, deep composite structure that can be packaged into a significantly smaller volume. The stowed reflector can be packaged vertically into the launch vehicle, providing significantly more aperture than a rigid reflector for the same launch vehicle volume.

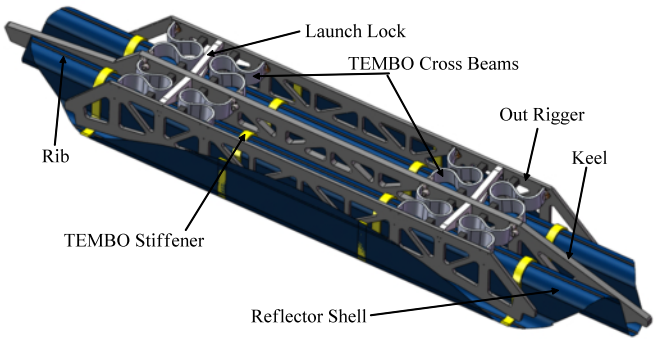

Fig. 3, Stowed 4m Solid Surface Deployable Reflector

Pleating of the composite reflective surface and bending the crossbeams connecting the backing structure creates significant strain energy that is stored while the reflector is in the packaged state. This strain energy is held during launch and gradually released on orbit by TEMBO® Elastic Memory Composite (EMC) materials, which are incorporated within four reflector shell stiffeners and eight crossbeams as shown in Fig. 2. These TEMBO® components store strain energy through a thermo-mechanical stowage and deployment cycle. Without this strain management, the reflector would explosively deploy when released and could not be restrained in the packaged shape without an impractical number of launch locks.

The reflector shell is manufactured using techniques established for rigid shell spacecraft reflectors. The shell is laid up on a bulk graphite mandrel using longitudinal gore sections for the reflective surface. The low CTE graphite fabric is applied as a no-bleed prepreg to maintain consistent fiber volume fraction in a very thin part. The reflector shell is stiffened in the longitudinal direction by integral composite ribs. The longitudinal ribs help maintain 'form stability' in the deployed shape, provide mounting locations on the reflector shell, and help manage the packaging of the reflector. The reflector shell is oven cured using only vacuum bag consolidation pressure. Ovens of sufficient size are available to CTD for reflectors as large as 6 meters in diameter.

The stiffened reflector shell is supported by a deployable backing structure. The backing structure provides significant structural depth and stability to the reflector system. Surface optimization of the reflective surface by iteratively adjusting the interface heights on the backing structure allows the surface to be tuned to the required level of accuracy. To allow pleating of the reflector shell, some of the contact points between the reflector and backing structure must separate during packaging and then return to a precise position upon deployment. In the stowed configuration, the backing structure also supplies additional stiffness and strength for withstanding launch loading. The backing structure is held down with traditional launch locks and the stowed pleats of the shell are stabilized with lightweight blocks on the backside of the reflector.

4. ENGINEERING DEVELOPMENT UNIT TESTING

CTD recently achieved a major milestone towards the validation of the TEMBO® reflector technology with multiple stowage and deployment cycles of a full-scale 2.5m by 4m Engineering Development Unit (EDU). This EDU is complete with all features described previously; including a thin continuous reflector membrane with attached TEMBO® stiffeners, a backing structure consisting of three sandwich panel ribs connected by eight perpendicularly mounted TEMBO® crossbeam elements, and numerous tunable/separable interfaces located between the reflector membrane and backing structure ribs.

For this testing, the EDU was first packaged into the pleated configuration in a packaging fixture developed by CTD. The stowed reflector was then installed in a gravity offload/deployment fixture, as shown in Fig. 4.

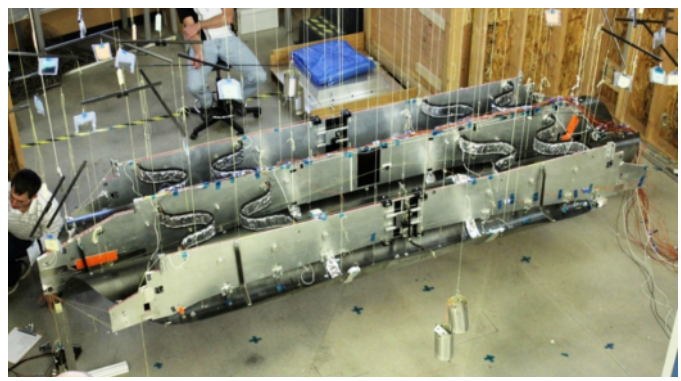

Fig. 4, Stowed EDU Reflector in Offload Fixture

To actuate deployment, the TEMBO® elements of the system, including the stiffeners adhered to the reflector shell and the crossbeams mounted within the backing structure, were heated using surface mounted resistive heaters. Due to the difference in thermal mass and size of the various TEMBO® components, considerable effort was made to power the heaters to result in a synchronized deployment of the reflector. In other words, the heating rates of the various components were studied and the power applied to each was adjusted to obtain roughly the same heating rate throughout the system during deployment. Despite this effort, the deployment rate of the reflector shell and crossbeams could not be perfectly matched, resulting in a slight tilt of the outer backing structure panels (outriggers) with respect to the center panel (keel), as can be seen in Fig. 5.

However, the reflector hardware was extremely tolerant to this condition and the deployment was unhindered. Full deployment was achieved in both deployments, as shown in Fig. 6. CTD will continue to evaluate the heating characteristics of the various components and investigate better insulation and rate control techniques so that deployment synchronization can be improved for future deployments.

Fig. 5, EDU Reflector Partially Deployed

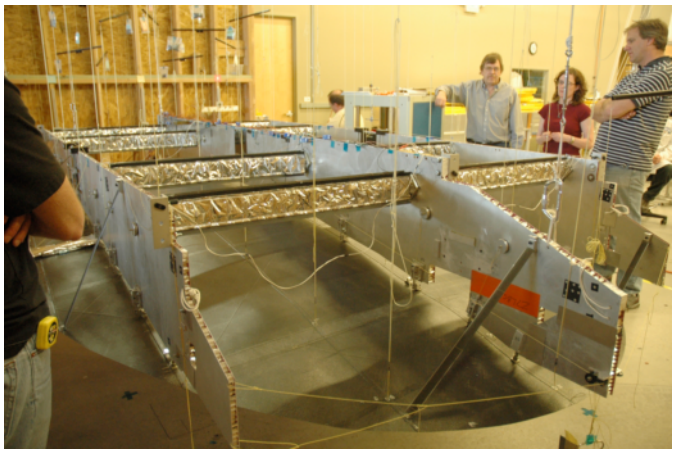

Fig. 6, Fully Deployed EDU Reflector

After each deployment, multiple photogrammetry measurements were taken of the deployed surface to evaluate surface repeatability. This was accomplished using CTD's photogrammetry camera mounted on a roller cart positioned underneath the reflector. Photogrammetry software was then used to extract XYZ coordinates of reflective targets adhered to the membrane to produce a point cloud of the surface. Point clouds from before stowage and after deployment were then compared to determine a delta-z RMS. Surface contour plots were also created so that these differences could be easily observed. It was found that the reflector deployed to a delta-z RMS of 0.27 mm. These results are extremely encouraging; however, after observing the contour plot, CTD feels that repeatability can still be easily improved. In particular, there was one localized area of the highly shaped reflector membrane that became inverted during packaging and remained stable in this position after deployment. This local area can be clearly seen in Fig. 7. For future deployments, this local position will be controlled by installing a tuning interface at this position to enforce the desired deployed shape.

CTD will continue to advance the TEMBO® reflector technology towards TRL 5 through system-level testing of the EDU. In particular, an RF range test was completed at NASA Glenn Research Center in late 2010 and a thermal distortion test is planned for July of 2011.

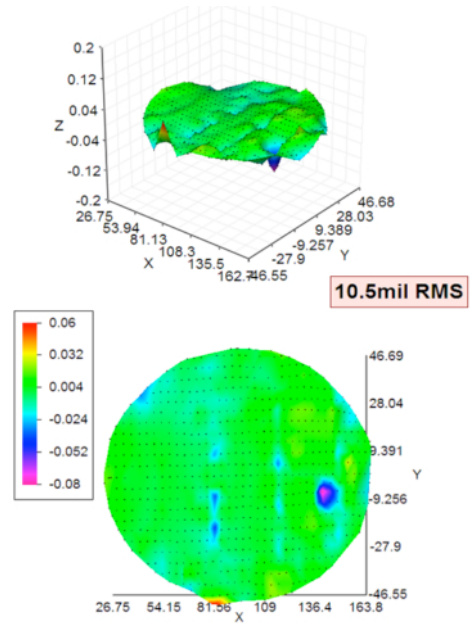

Fig. 7, Contour plot of deployment repeatability

5. ACERAD CONCEPTUAL STUDY

Progress on the large aperture, solid surface deployable reflector is being specifically targeted towards the ACERAD cloud profiling radar as discussed in Section 2. The first part of this effort was to define a conceptual design for the ACERAD Dragonian antenna design shown in Fig. 8 that could meet surface accuracy requirements and package down adequately to fit in a 4m launch vehicle fairing.

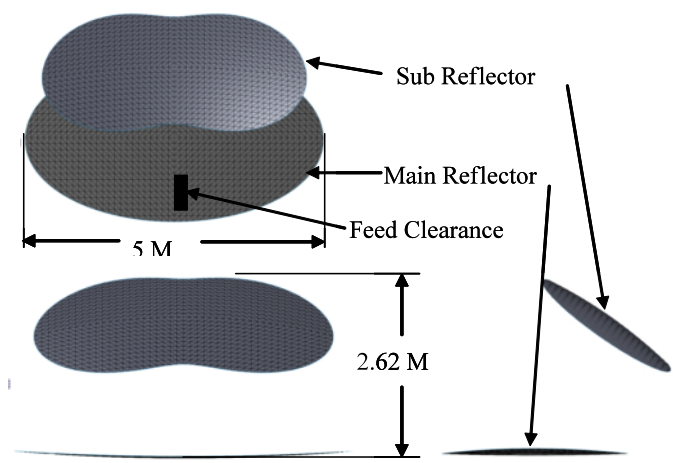

Fig. 8, ACERAD Dragonian Reflective Surfaces

The 4m fairing is a desirable goal to keep the total cost of the mission down by not requiring a more expensive launch with a 5m fairing. CTD continued to work with JPL on a conceptual study to adapt the flexible precision reflector

design to the requirements for ACERAD. The key requirement is extremely high surface accuracy.

A conceptual study funded under this ACT identified a number of ways to package the 2.5m by 5m main and subreflector within a 4m fairing. All concepts require reducing the distance between the main reflector and subreflector, and reducing the overall length of both reflectors.

The final conceptual design that was selected allowed both reflectors to have substantial thickness, maximized the rigid area of both reflectors, and still fit within the 4m fairing. This concept involves closing the two reflectors together like a clamshell, then folding the ends of both reflectors downward around a payload volume as shown in Fig. 9. The ends of the main reflector are folded by 90° and the ends of the subreflector are folded by 45°.

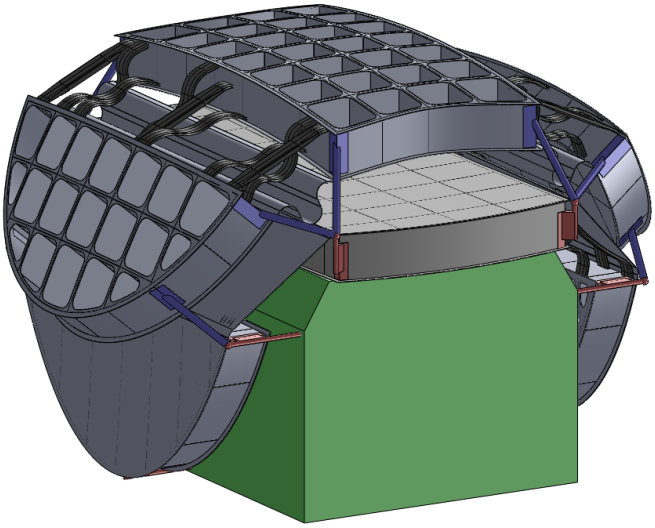

Fig. 9, Selected ACERAD Stowage Configuration

Work on the down-selected conceptual design was continued using funding from JPL to evaluate the solid surface reflector for ACERAD. The backing structure and launch lock details shown in Fig. 9 were refined during this second phase. Also, the design details for the fold joint were created and evaluated for structural stiffness in the deployed state and thermal stability. The deployed configuration of the main reflector is shown in Fig. 10 and the deployed configuration of the subreflector is shown in Fig. 11.

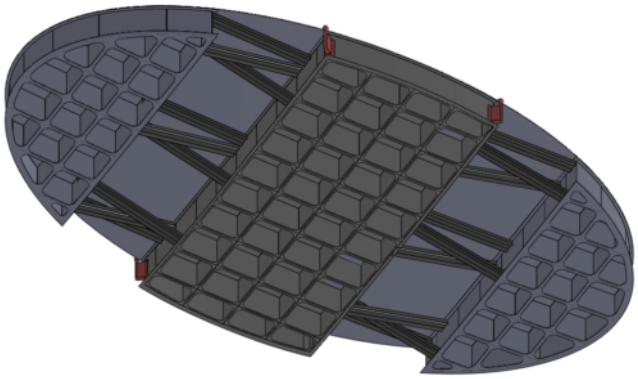

Fig. 10, ACERAD Deployed Main Reflector

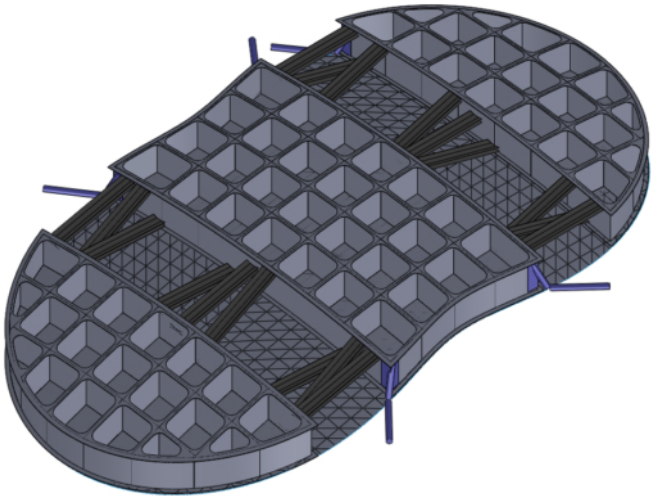

Fig. 11, ACERAD Deployed Subreflector

A deployed finite element model of the ACERAD subreflector was created to look at thermal distortion and deployed natural frequencies. The thermal distortion model is a quarter section symmetric model to reduce computational overhead and modeling time. The model includes the rigid backing structure sections and the fold joint with crossbeams, modeled to be identical to those used within the backing structure of the offset-fed deployable reflector. The model was utilized to evolve the backing structure in the fold sections to minimize thermal distortion. The results of one thermal distortion run are shown in Fig. 12. With the current crossbeam design, the thermal distortion is roughly .4mm RMS. A new crossbeam and shell stiffener design must be developed with lower CTE to meet the ACERAD requirement of roughly .1mm RMS. However, there is significant design flexibility associated with these TEMBO® elements and CTD feels that the requirements can be met with an ACERAD specific design.

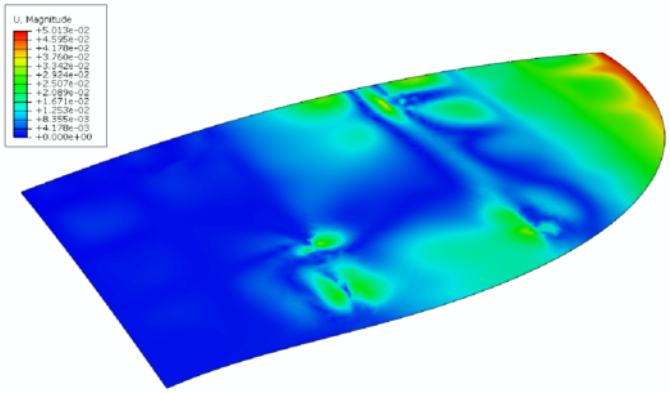

Fig. 12, Thermal Distortion of Subreflector

A full finite element model of the subreflector was created to evaluate the deployed stiffness of the reflector design. Normal modes were analyzed for the reflector when cantilevered from one edge. The resulting first mode, with a frequency of 1.4 Hz, is shown in Fig. 13.

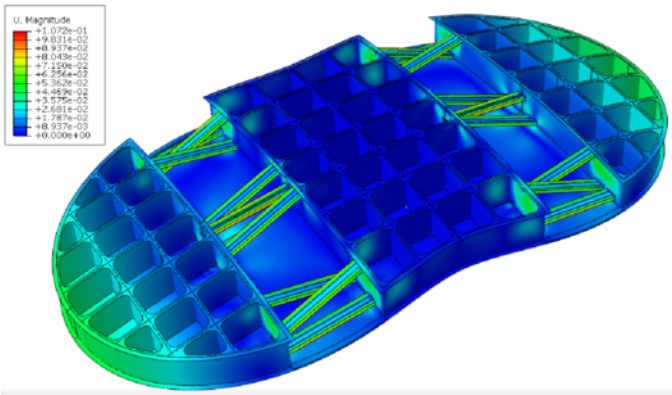

Fig. 13, First Natural Frequency of Subreflector

6. NEXT EFFORTS

Two packaging and deployment cycles of the complete EDU reflector in a gravity offload fixture bring the TRL of the large aperture, solid surface reflector to 4. Continued work on the EDU through this ACT will include the highest risk environmental test: a bulk thermal distortion test. This is significant progress beyond TRL=4, but all testing required to reach TRL 5 will not be completed.

Additional tasks will also be completed to advance the readiness of the reflector for the ACERAD mission. The first task is to build a rigid section to demonstrate manufacturing techniques for high thermal stability. The second task is to perform precision deployment testing on the crossbeams to support repeatability predictions for the ACERAD fold design.

7. CONCLUSION

The solid surface deployable reflectors using CTD shape memory technology enable larger apertures for a number of RF missions. This ACT is identifying the technology advancements required to support the ACERAD cloud profiling radar and demonstrating an EDU reflector with a continuously pleated aperture.

The ACERAD study has developed a concept to package the two large 5m by 2.5m reflectors of the Dragonian antenna design into a 4m launch vehicle fairing. The preliminary analysis shows that this concept is feasible, but that new designs must be developed for rigid reflector sections and low CTE TEMBO® components to meet the high surface accuracy requirements for operation at W band.

The EDU reflector has demonstrated packaging and deployment of a full-scale solid surface deployable reflector, bringing the TRL to 4. The EDU reflector includes a 2.5m by 4m flexible reflective surface that pleats into 3 longitudinal pleats to reduce the width of the reflector to 0.9m. The backing structure includes 8 TEMBO® crossbeams mounted between three rigid backing structure sandwich panels. These crossbeams are also packaged into a stowed configuration and assist in holding the reflector in the pleated shape, while also providing significant stiffness to the backing structure upon deployment. The measured deployment repeatability was found to be .25mm RMS, showing the capability to meet Ka band performance requirements.

These parallel efforts are necessary to advance the required elements of the cross cutting solid surface deployable reflector technology. The technology roadmap shows how different configurations of the solid surface reflector all borrow from the same basic capabilities provided by a set of building block technologies. Additional funding from other sources is being pursued to apply the technology to rigid reflectors, point-to-point communications, and small satellite applications.

REFERENCES

[1] Committee on Earth Science and Applications from Space: A Community Assessment and Strategy for the Future, National Research Council, "Earth Science and Applications from Space: National Imperatives for the Next Decade and Beyond," 2007.