An 8-40 GHz Wideband Instrument for Snow Measurements

Timothy E. Durham
Harris Corporation, Government Systems Division
P.O. Box 37
Melbourne, FL 32902

Abstract **This new start Instrument Incubator Program (IIP) will build and test a wideband instrument (8-40 GHz) in support of the Tier III Snow and Cold Land Processes (SCLP) mission as defined by the Decadal Survey. Harris Corporation will team with engineers from NASA Goddard/Glenn, Nuvotronics, and scientists from multiple Universities for this effort. Multiple instruments will be required to achieve the baseline SCLP mission goals using conventional technology. The capability to perform multiple NASA missions in a single instrument will be achieved by combining a wideband aperture with a software reconfigurable payload capable of performing multiple functions.**

The broad bandwidth of this instrument allows flexibility in the number of frequencies used to measure Snow Water Equivalent (SWE), a primary goal of SCLP. Potential improvements in the estimation of SWE and its spatial/temporal variability have significant implications for hydrologic modeling and water resources management on a global scale. The wideband approach can also mitigate RFI by selecting non-interfering channels. The innovative manufacturing method for the wideband antenna will reduce the size and weight of the payload, add additional functionality, and allow cost/power to remain relatively unchanged.

The entry technology (8-40 GHz feed) is currently at TRL 3 for this application. We plan to bring the wideband feed/reconfigurable radar/radiometry payload, to an exit TRL of 6 for airborne applications. We will demonstrate the wideband feed and payload in both a ground and airborne demonstration during a 30 month period of performance. The first year demonstrates the compatibility of an existing wideband feed (2-18 GHz) with multiple existing radars to measure SWE of documented snow. In the second year, a wideband (8-40 GHz) passive array will be fabricated and integrated with a reconfigurable payload (SAR/radiometer). During the third year, flight tests on the NASA P3 and data reduction with new algorithms will demonstrate the science benefits of a wideband feed with reconfigurable payload.

INTRODUCTION

This IIP will carry out the development and demonstration of a wideband (8-40 GHz) instrument performing multiple functions (radar/radiometry) through a single array feed for a reflector. The core technology to be developed is a wideband array feed, which provides continuous coverage from 8-40 GHz from a single aperture. Building a broad bandwidth, mm-wave system requires fabrication techniques beyond the capability of traditional printed circuit technology. We will build the antenna aperture and beam-forming network as a single unit using a state of the art metal/dielectric micromachining technology. This single antenna replaces the four horns per beam required to cover the baseline SCLP mission, thus reducing both size and weight. Both ground based radar and airborne SAR/radiometry tests will be performed to demonstrate the enhanced capabilities of this technology.

The proposed instrument is primarily targeted to support the Snow and Cold Land Processes (SCLP) Earth Science mission as outlined in the Decadal Survey. SCLP's objective is to measure snow accumulation in order to determine and track the fresh water availability around the world. The baseline SCLP concept uses a combination of SAR and radiometry in a range of narrowband frequencies from X- to Ka-Band (SAR at 9.7 and 17 GHz, radiometry at 19 and 37 GHz). Past empirical studies have shown that varying consistencies and granularities of snow reflect RF energy with known characteristics versus frequency and polarization. The use of a 4 channel dual frequency/polarization system at X-band and Ku-band has been chosen as the baseline radar SWE retrieval algorithm for SCLP. This baseline algorithm has been experimentally proven at a certain level of accuracy, but there is room for further improvement.

The most important benefit of the proposed instrument over the SCLP baseline is the increase in the accuracy of SWE measurement that it potentially affords. Additionally, the Wideband Instrument for Snow Measurements (WISM) instrument reduces data processing and uncertainty, reduces revisit times, mitigates RFI interference, reduces cost, size and weight, all while allowing a flexible payload that can mature as the science behind the measurements mature. As another benefit, the envisioned instrument can serve as the versatile tool needed to perform the measurements required to further mature the SWE measurement science. The instrument design is versatile in several key areas: 1) more measurement bands can be added as needed within the wideband antenna's 8-40 GHz operating range, 2) large radar time bandwidth products can be achieved enabling scientists to investigate new concepts for SWE measurement, and 3) the design provides for software control of important radar parameters such as pulse repetition frequency (PRF), coherent data period (CDP), pulse width, waveform type, etc.

The wideband passive antenna to be built for the WISM will provide performance improvement over existing technology whether implemented in a single or multi-beam system. However, additional performance improvement is possible by viewing this development as part of a roadmap to the eventual goal of building a fully active phased array. In this case, active components (power amplifiers, low noise amplifiers, phase

shifters) would be integrated with the passive beamformer components and would provide additional benefits, particularly for beam shaping, reconfigurability and scanning capability.

APPLICATION TO THE SCLP MISSION

There are multiple scenarios reflecting how the WISM can improve airborne/space snow accumulation measurements as outlined in this section.

Baseline Decadal Survey SCLP Mission using a Single Multi-band Feed: An important science advantage results from the fact that a wideband array allows for the antenna footprints to be co-bore-sighted at all frequencies. In areas where terrain, foliage, or wind leads to snow cover variation over a single footprint, having the same footprint at each operating band helps ensure SWE is measured accurately. Snowpack features such as wind crusts, ice lenses etc., occur over smaller scales of less than 100 m leading to spatial heterogeneity that can impact the returned signal [1]. For instance, the presence of an ice layer can change the microwave brightness temperature by up to 50 K [2]. Therefore, having the footprint of the different bands co-located would lead to consistent measurement at each frequency and as a result improve the SWE retrievals and estimates. Multiple co-bore-sighted beams at all bands will improve global coverage for the SCLP mission. This will make it possible to map SWE over the whole earth on each pass and greatly improve the quantity of useful data obtained.

Enhanced SCLP Mission Having Additional Instrument Bands using a Single Multi-band Feed: Adding measurement frequencies has the potential to offer significantly enhanced snow accumulation measurements over the baseline four channel system using two frequencies and polarizations. More measurements and analysis need to be performed in order to determine the optimum configuration. The wideband antenna, reconfigurable radar system, and program of airborne measurements resulting from this IIP will enable the needed measurements to be made in a cost efficient manner. The reconfigurability of the instrument allows for new frequencies to be added in the future as the program progresses without eliminating existing capability.

Exploratory Concept: Wide Bandwidth SAR at Multiple Bands using a Single Multi-band Feed: The wideband instrument developed for this IIP can be used to investigate a potentially revolutionary change in the methodology used to perform SWE measurements. Current measurements are based on narrowband volume scattering measurements that are very sensitive to grain size. A more direct measurement of SWE using time of travel can possibly be made. This requires the ability to accurately measure the distance to the snow surface and snow-ground interfaces. A previous study has demonstrated this for ground based snow measurements using FMCW radars [3] if multiple bands are used. WISM can be used to carry out exploratory airborne experiments to the required accuracies with a spaceborne instrument as an eventual goal.

The proposed airborne testing program utilizing the wideband instrument developed for this IIP will contribute important new scientific data and is expected to lead to improved algorithms for SWE measurement from space. The wideband antenna technology to be developed has potential application to current and future earth science missions using multiband/wideband micro/millimeter wave instruments.

HARDWARE DESCRIPTION

Fig. 1 describes a potential operational concept for the SCLP mission based on the Decadal Survey. A sun-synchronous orbit at 510 km altitude with 30 degree beam pointing angle is desired. A minimum swath width of 40 km is needed with a desire to provide conical scanning modes to cover widths of 120 km and 400 km. The swath width footprints are illustrated in the Fig. 1 (a) at the 30 degree inclination angle for the 40 km swath width. The baseline operational SCLP mission calls for two SAR bands (9.7 and 17 GHz) and two radiometry bands (19 and 37 GHz) with full VV- and VH- polarizations for SAR and H-polarization for radiometry. Current technology calls for the use of a 2-m offset, directly illuminated reflector with a set of multi-band feeds as illustrated in Fig. 1 (b). Each band uses separate feed horns to place a beam on the earth as shown in Figure 2 (a). This leads to beams that are not co-bore-sighted and are measuring different snow at each of the four frequency bands. In our concept using a single 8-40 GHz feed to cover the 40 km swath width, the four frequencies would be co-bore-sighted as illustrated in Fig. 2 (b). The wideband feed array would provide a single V- and H-polarization terminal per beam feed for connection to the SAR and radiometer instruments as shown notionally in Fig. 3.

In order to show the science benefit of the proposed operational concept, we intend to perform two field experiments over the course of three years. The first is a ground experiment to be conducted during the first year using existing wideband 2-18 GHz array feeds and FMCW radars. The test will be performed on documented snow in Idaho via a sled-mounted radar. This will show the benefit of the wideband antenna

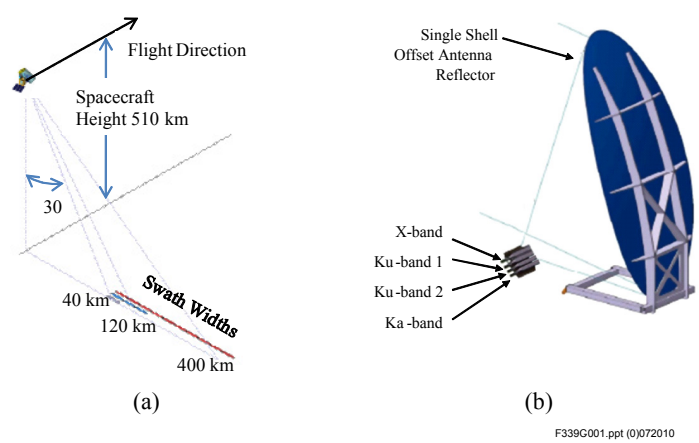

Fig. 1. Baseline operational concept for the SCLP mission. (a) Flight path and swath widths. (b) feed array for solid offset reflector.

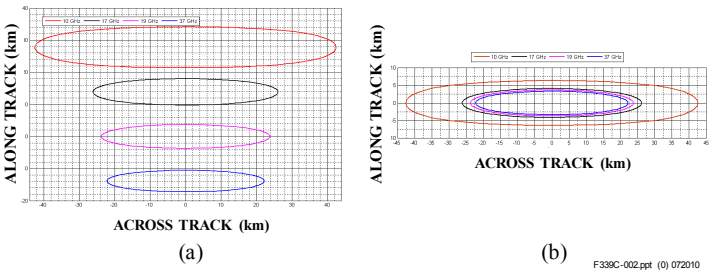

Fig. 2. 3-dB beam patterns on the ground from (a) separate feed arrays and (b) a single feed array which enables all footprints to be co-bore-sighted for enhanced science.

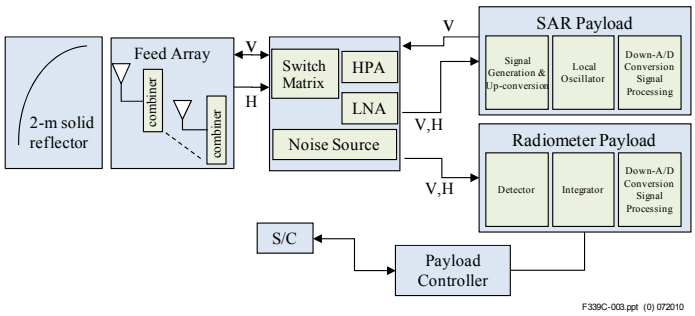

Fig. 3. Baseline operational concept with single wideband co-bore-sighted feed per beam position.

matched with multiple wideband radars in measuring snow profiles and SWE. During year two, the 8-40 GHz array feed and multi-band SAR/radiometer instruments will be fabricated. The second field experiment will be conducted during the third year from the NASA P3B Orion stationed at the Wallops Flight Facility, using the wideband feed and instruments developed during the first two years of the program. A notional block diagram of the equipment for the two field experiments is given in Fig. 4.

The Current Sheet Array

For this program, Harris proposes to implement a version of our Current Sheet Array (CSA) antenna technology from 8-40 GHz. The CSA is a low-profile, wideband, coupled-dipole array technology that has been under development at Harris since 1999. The exact bandwidth achieved is dependent on application requirements for VSWR, gain, and scan range, but 9:1 bandwidths are typical. One example of prior work was the 256-element MCWESS Program for AFRL/RY, which demonstrated a minimum of 70% aperture efficiency over 1-8 GHz.

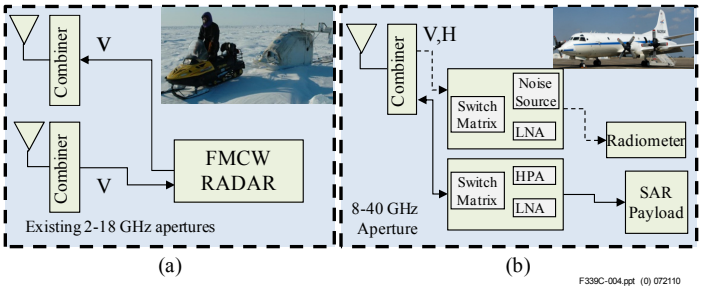

Fig. 4. Planned field experiments (a) using existing 2-18 GHz hardware on a ground test and (b) using developed 8-40 GHz hardware on an airborne test

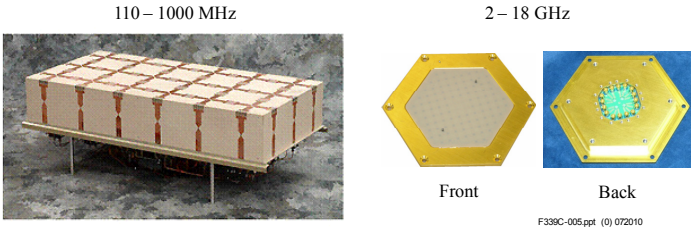

Fig. 5. Harris demonstrated wideband CSA from VHF to microwave frequencies.

The CSA achieves wideband performance by drawing on principles derived from broadband Frequency Selective Surface (FSS) technology [4]. A typical cross-section of the CSA antenna consists of an element layer, ground-plane, and a dielectric spacer layer between the ground-plane and the element plane which maintains the proper ground-plane spacing. The basic CSA design is scalable and has been demonstrated at ranges of frequencies from 110 MHz to 18 GHz. Fig. 5 shows tested breadboards covering the range of frequencies from 110 MHz to 18 GHz.

To achieve the 40 km swath widths outlined in the Decadal Study, 4 x 8 passive arrays will be required for each beam position. Each of the 32 elements of the array is combined to a single V- and H-polarization at the back of the array through a recta-coax beamformer. A rendering of the antenna is shown in Fig. 6.

Nuvotronics PolyStrata™ Process

The PolyStrata™ microfabrication process [5] is a new metal/dielectric micromachining technology, originally developed under the DARPA-sponsored 3-D Micro Electromagnetic Radio Frequency Systems (3D-MERFS) Program. It has demonstrated the lowest losses on record for a circuit-board-like 3D interconnect technology at Ka-band by using air-core micro recta-coax. Details of this technology have been published and various millimeter wave components, including resonators, hybrids and antennas have been demonstrated with this process. Fig. 7 illustrates some

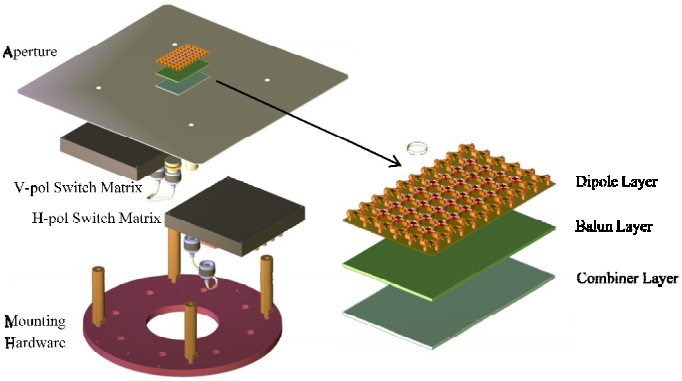

Fig. 6. Depiction of the 8-40 GHz, 4 x 8 passive array

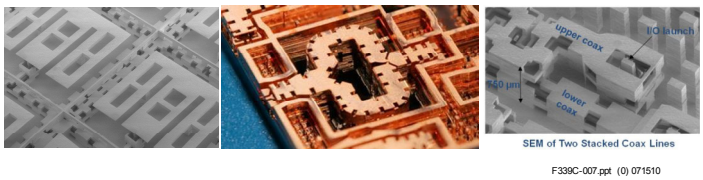

Fig. 7. Images of patch antenna [6], impedance transformer, and coax transmission lines created using the PolyStrata™ process. Dimensions on photographs are approximately 4mm on a side.

microwave components previously created by Nuvotronics using the PolyStrata ™ process.

PolyStrata™ technology has major advantages as a propagation medium for microwave electronics:

- The lowest loss transmission lines per unit volume (as low as 0.07 db/cm at 36GHz),
- High isolation (tested greater than 64 dB isolation at 250 µm pitch,
- High density 3-dimensional layout of components for ultra-small microwave systems,
- Near zero dispersion from 1GHz - 100's of GHz,
- High power handling capability due to 400 W/mK thermal conductivity of copper,
- Batch manufacturing / circuit board like processing enables high quality and lower costs per cm^2 in volume compared to LTCC, machining, and competing technology.

We intend to fabricate the passive array, baluns, and power combiner required to build the wideband antenna using the PolyStrata™ process. Each of these will be fabricated in layers that are bonded together in a self-aligning solder process, as illustrated by prior work with a patch antenna array in Fig. 8. The resulting passive array is expected to be the lowest loss embodiment of the CSA yet built.

The Multi-Mission Payload Testbed (MMPT)

Harris has recently demonstrated an X-band high-resolution radar capability with its internally developed Software Defined Payload (SDP) multi-mission testbed. The architecture of this testbed is directly leveraged from Harris' Ka-band space-qualified Software Defined Radio (SDR) delivered to NASA Glenn as a part of the CoNNeCT Program. The digital portion of this testbed consists of a reprogrammable Virtex 4 based, space-qualified reconfigurable processor and a High Speed Data Converter Assembly (HSDCA). The digital baseband linearly frequency modulated chirp waveform is created on the processor

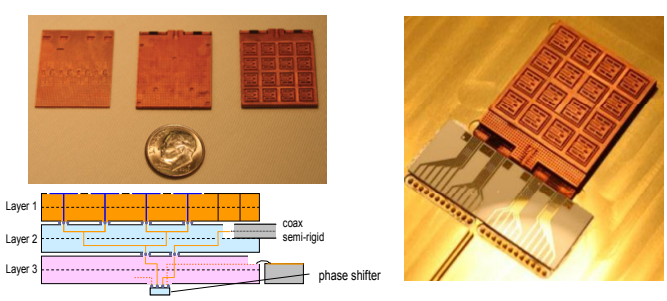

Fig.8. 4x4 Element Ka-Band transmit and receive antenna using 3 layers of integrated PolyStrata™ 3D microwave circuit [7].

and converted to baseband with the HSDCA. The pulse is then upconverted, amplified, and transferred to the antenna. The radar signal return is then downconverted to lower intermediate frequency (IF), using either an analog compression stretch-mode for high resolution or an uncompressed chirp mode for lower resolutions. This returned signal is then digitally sampled by the HSDCA as shown in the block diagram in Figure 9.

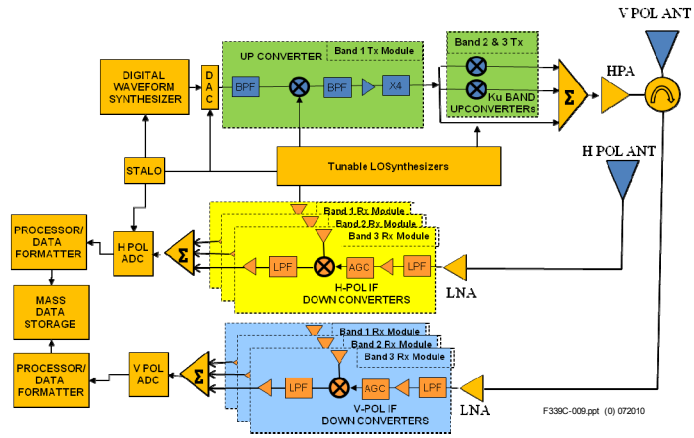

Fig. 9. Block diagram of Harris Multi-Mission Payload

Due to the reprogrammable nature of this testbed, the sensor can support a wide variety of radar pulse & frequency parameters while providing significant throughput with the four Virtex 4 FPGAs to achieve flexibility in receive signal processing algorithms. While the current instantiation of the testbed supports X-band, minor modifications of the RF converters coupled with wideband amplifiers can support frequencies from X-band through Ku-band. Radar pulse bandwidths of 1-900MHz can be generated across pulsewidths as short as 100 nanoseconds, making this radar flexible to a variety of collection scenarios. A second receive channel will be used to support the dual polarization receive capability. A flexible IF-sharing capability reduces back-end hardware while simultaneously receiving 3 separate frequency bands in the X- to Ku-band spectrum. This implementation reduces the digital back-end processor hardware from 6 channels to 2 channels without any loss.

Testing and Validation

In the first year of the program an existing 2-18 GHz CSA aperture will be integrated with existing FMCW radars developed by Dr. Hans-Peter Marshall of Boise State University. These systems will be used to perform measurements on instrumented snow fields in Idaho. These instrumented snow fields allow comparison of the radar data to verified ground truth. These tests will demonstrate the compatibility of the CSA with wideband radar measurements

Antenna testing of the Nuvotronics passive array will be performed by Harris and NASA Glenn at their respective facilities. Functional checks and impedance measurements will be conducted using laboratory vector network analyzers. After the basic operation of the array has been confirmed with bench tests, limited pattern measurements will be conducted on one of the many antenna ranges at these facilities. After the antenna

performance has been qualified, it will be integrated with the separately developed Harris SAR.

The antenna and both the SAR and radiometer (to be supplied by NASA Glenn) instruments will then be integrated with the NASA P3 research aircraft. There are several locations in the bomb bay of the P3 which are available for mounting the antenna. The integration of the instruments and the aircraft will take place at the home base of the P3, Wallops Island, Va. After the instrument is integrated with the aircraft, a check flight will be conducted in the area. The P3 will then conduct research flights over instrumented snow fields.

CONCLUSION

The primary technology to be developed on this IIP is the wideband CSA antenna using PolyStrata™. The enhancements to be made to the MMPT leverage Harris' previous investments in software defined payloads developed for the NASA Connect Program. This versatile hardware will demonstrate the advantages of a wideband aperture, while also having a clear path to an integrated spaceborne instrument.

CSA technology has been previously matured to a high TRL level for frequencies below 18 GHz. This IIP will mature the technology needed to more fully realize the benefits of wideband array technology for space. The potential benefits are many as shown in Table 1.0. Chief among the technological benefits is reduction of size, weight and power (SWaP). Compared to narrowband array technology, the SWaP advantages are obvious, since multiple antennas could be combined into one array with all the same advantages (i.e., electronic scan, beam shaping). Compared to a conventional multi-horn feed array, there are significant advantages in size and weight. The wideband array will be nominally 25 cm^3 with a weight of 201 g. A current production single beam space feed at X-band has a volume of 9657 cm^3 and weight of 1.86 kg. In this case, more functionality is obtained with greater than 100:1 volume and 9:1 weight reduction. Greater weight/volume savings are obtained when considering four frequency bands.

The baseline SCLP concept requires that multiple beams be formed both spatially and across frequency. A wideband array allows each beam position to be co-bore-sighted across frequency. In the case of an SCLP implementation with 10 beams, the number of feeds is reduced from 40 to 10 using a wideband array. Development of a fully active phased array in the future could reduce this to a single active feed array. Micro-machined wideband CSA technology offers solutions at varying levels of system complexity between completely passive and active.

Table 1.0. Scientific and Technological Advantages of Wideband Instrument Technology

Characteristic	SCLP Science Benefit	Benefits for Other Missions	Array Type
Co-bore-sighted beams over frequency	Same footprint for all frequencies means same snow is being measured; Reduces processing requirements	Same footprint for any mission requiring radar at multiple frequencies	Passive or Active
Multi-beam	More coverage per pass; complete global coverage;	More coverage per pass	Passive or Active
More operating bands	Improves SWE algorithms covering more types of snow; Improved foliage penetration; RFI mitigation by moving measurement band(s)	Improved algorithms for measuring relevant quantities	Passive or Active
Wide instantaneous bandwidth	Enables time of travel measurements of snow depth to required accuracies	Improves range resolution for any radar system	Passive or Active
Reduced Size and Weight	Enables mission or allows addition of more instruments	Desirable for any space mission	Passive or Active
Beam Shaping	Maintain constant footprint over frequency (important for radiometry); RFI mitigation by null steering	Sidelobe level control; RFI mitigation	Passive-Limited to fixed bands; Active-Full
Electronic Scan	Improved global coverage; better control of integration times; maintain coverage to areas with snow	Enables more measurements when snow not in FOV	Active

ACKNOWLEDGMENT

The work of all who contributed to this IIP proposal submission is gratefully acknowledged, notably Sean Ortiz, Cynthia Wallace, Steven Brown, Todd Johnson, Alan Mast, Al Kochis, Jim Rawnick, Mysore Sheshadri (all from Harris), Terence Doiron (NASA Goddard), Hans-Peter Marshall (Boise State University), Leung Tsang (University of Washington), Félix Miranda (NASA Glenn), Scott Meller, Jean-Marc Rollin, David Sherrer (Nuvotronics), Kostas Andreadis (Ohio State University) and Natalia Galin (Fulbright Scholar, NASA Goddard).

REFERENCES

[1] M. Sturm, and C. Benson, Scales of spatial heterogeneity for perennial and seasonal snow layers, Ann. Glaciol., 38, 253–260, 2004.

[2] A. Edgerton, A. Stogryn, and G. Poe, Microwave radiometric investigations of snowpacks, Aerojet Gen. Corp., Microwave Div., El Monte, CA, Final Rep, 1971.

[3] G. Koh and N. Yankielun, "Snow Cover Characterization using Multiband FMCW Radars", *Hydrological Processes*, Vol. 10, pp. 1609-1617, 1996.

[4] B. A. Munk, Finite Antenna Arrays and FSS, Wiley, Chapter 6, 181-213, 2009.

[5] D. Sherrer and J. Fisher, "Coaxial waveguide microstructures and the method of formation thereof," U.S. Patent 7,012,489 Mar, 2006.

[6] M. V. Lukic, and D. S. Filipovic, "Integrated cavity-backed ka-band phased array antenna," *Proc. IEEE-APS/URSI Symposium,* June 2007, pp. 133-135.

[7] D. Filipovic, G. Potvin, D. Fontaine, Y. Saito, J.-M. Rollin, Z. Popovic, M. Lukic, K. Vanhille, C. Nichols, "μ-coaxial phased arrays for Ka-Band Communications," *Antenna Applications Symposium*, Monticello, IL, Sept. 2008, pp. 104-115.