Thermal InfraRed Compact Imaging Spectrometer (TIRCIS): Instrument update and preliminary volcanic gas composition measurements

Robert Wright, Paul Lucey, Sarah Crites, Andrea Gabrieli, Harold Garbeil, & Mark Wood

Hawai‘i Institute of Geophysics and Planetology, Honolulu, HI

Partnering with: Brandywine Photonics; New England Optical Systems; LightMachinery

UNIVERSITY of HAWAI‘I®
MĀNOA

OVERVIEW OF THE TIRCIS PROJECT

- Many targets of interest have distinctive absorption and emission spectra in the long-wave thermal infrared (~8-14 μm)
- Imaging interferometry has potential for characterizing these targets at high spectral resolution, with high signal-to-noise
- IIP project funded in 2014 to produce a compact instrument for this purpose, specifically aimed at small/microsatellite platforms - TIRCIS

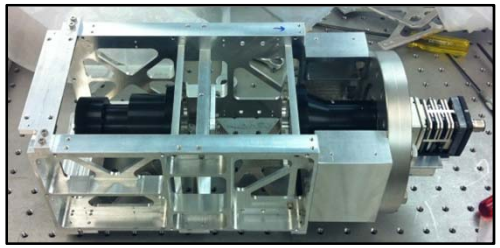

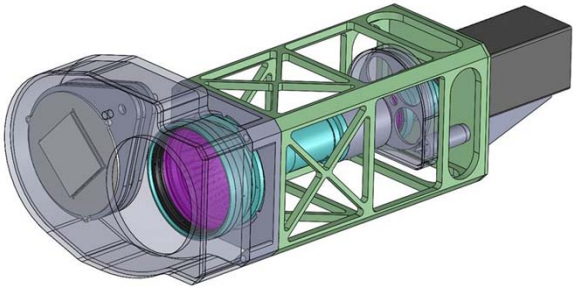

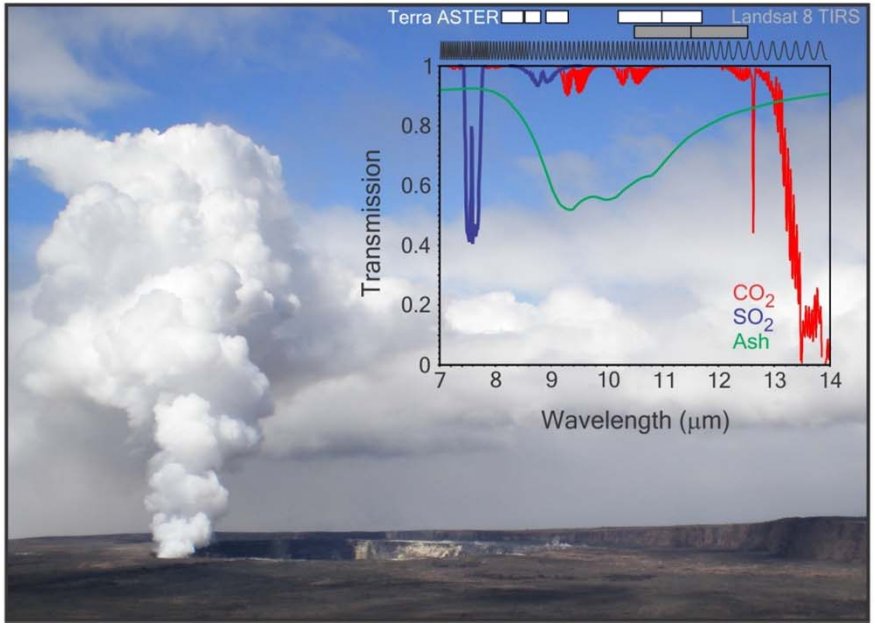

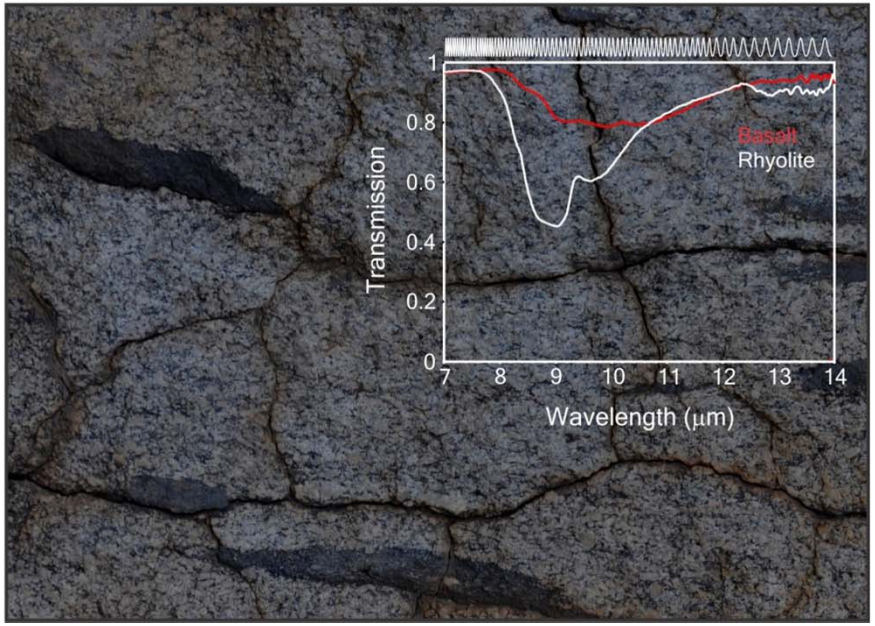

SPECTRAL IMAGING WITH A SPATIAL INTERFEROMETER AND A PUSHBROOM APPROACH

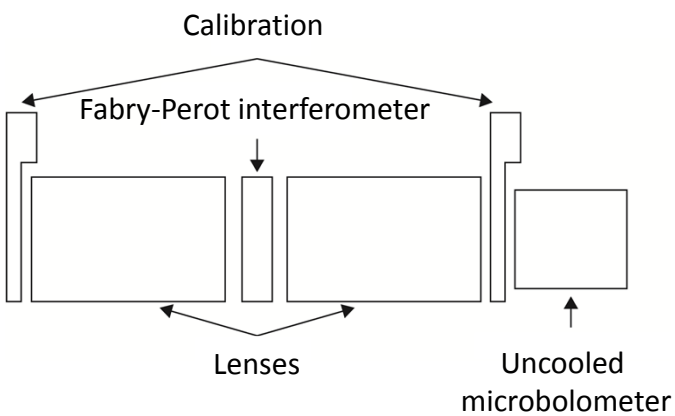

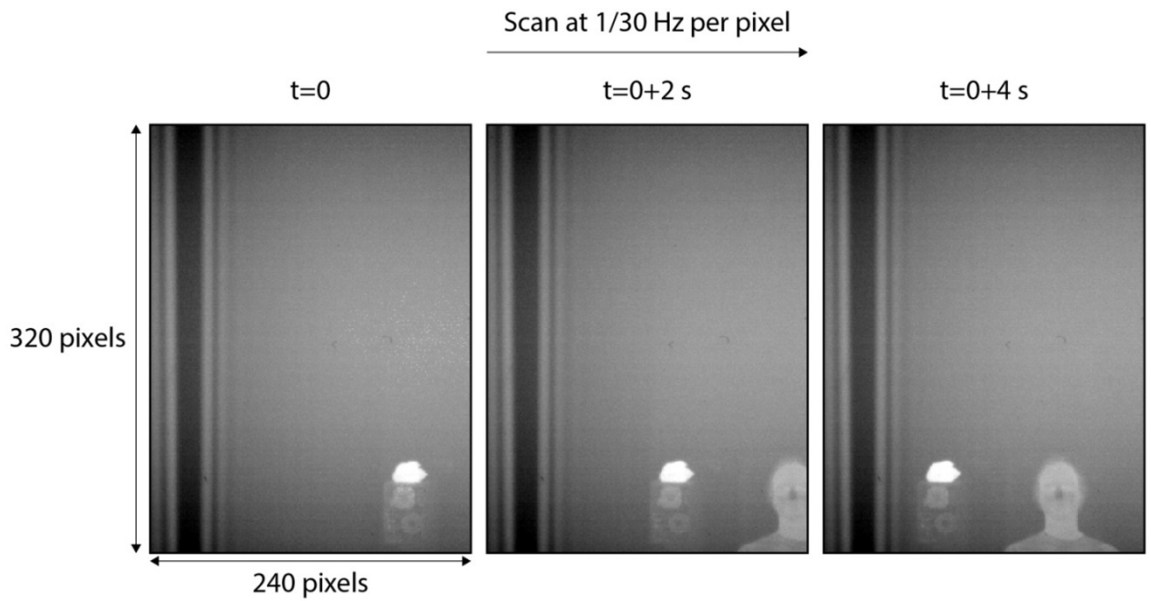

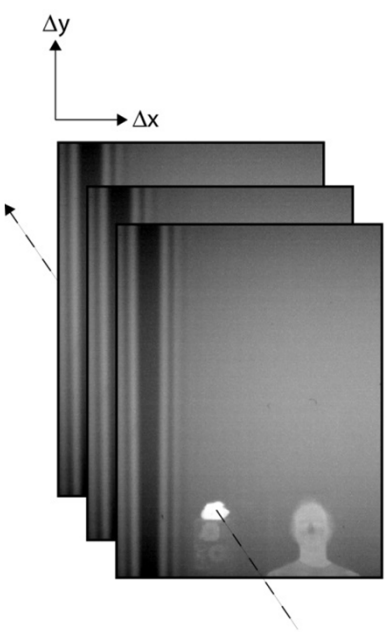

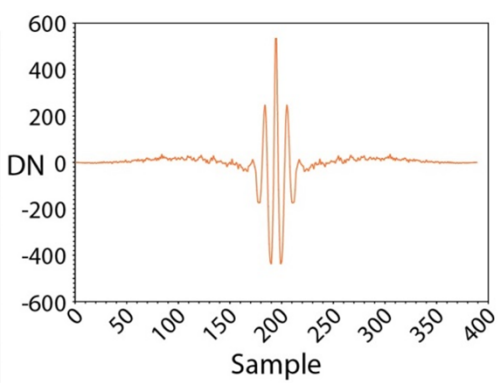

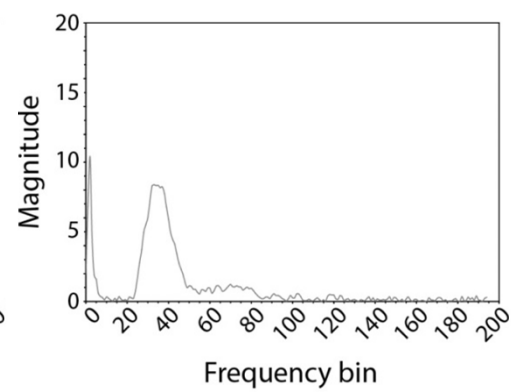

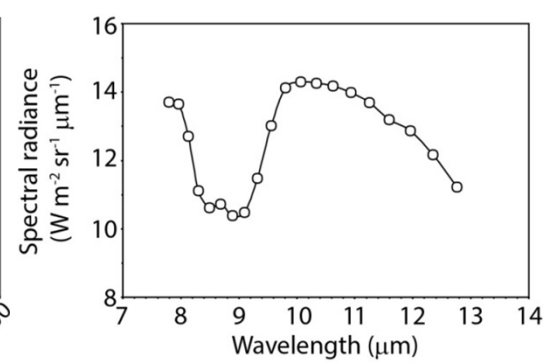

SPECTRO-RADIOMETRIC CALIBRATION

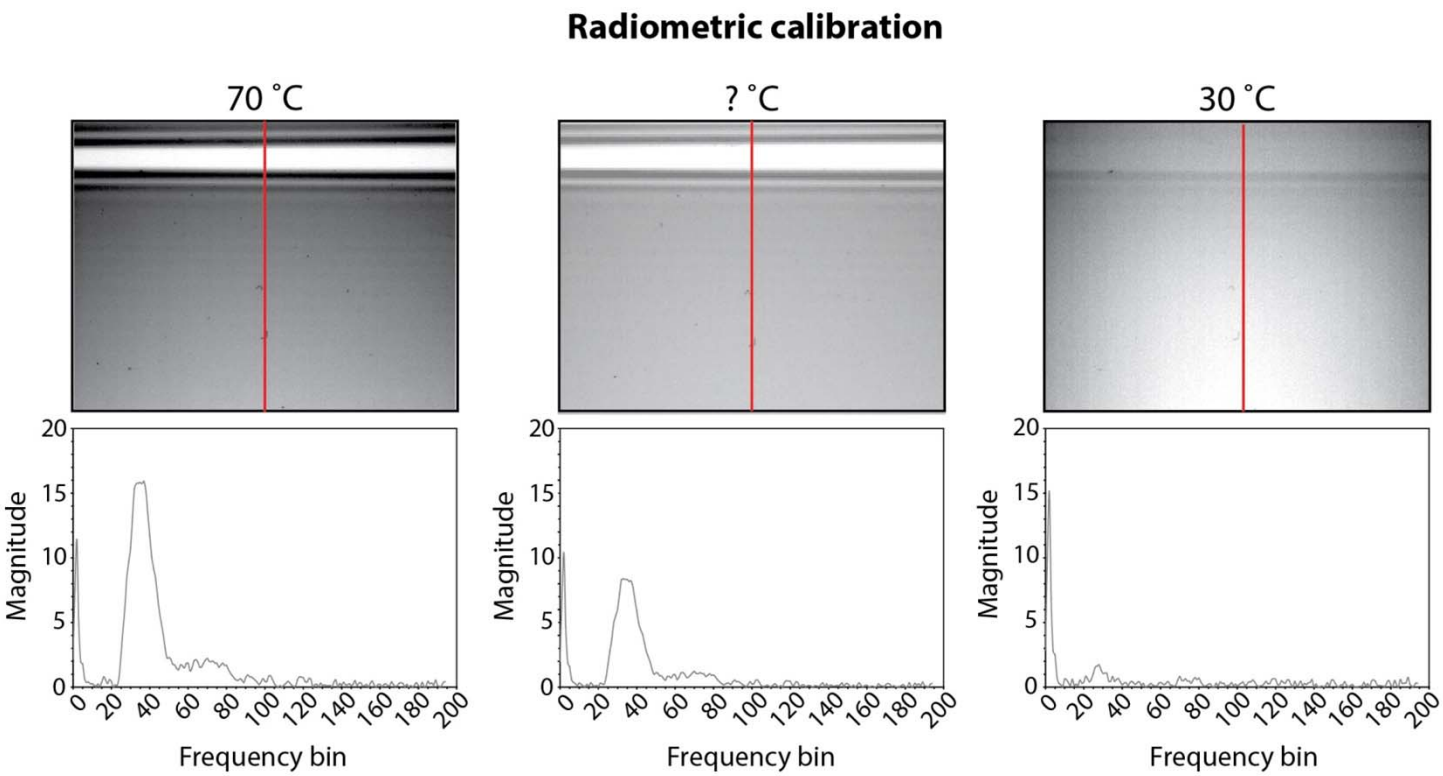

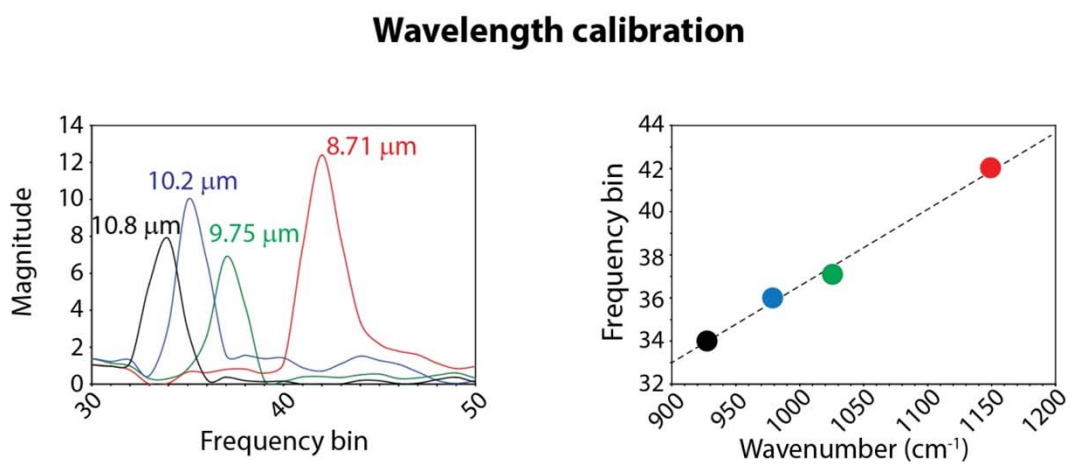

Our starting point – TIRCIS breadboard

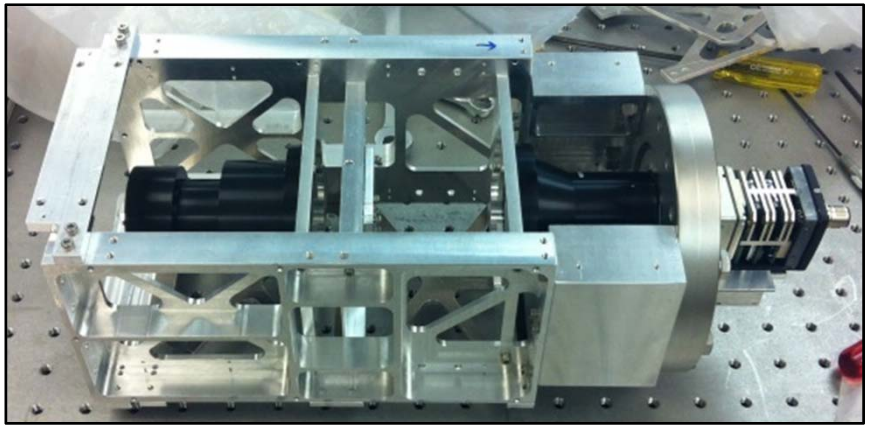

July 2013

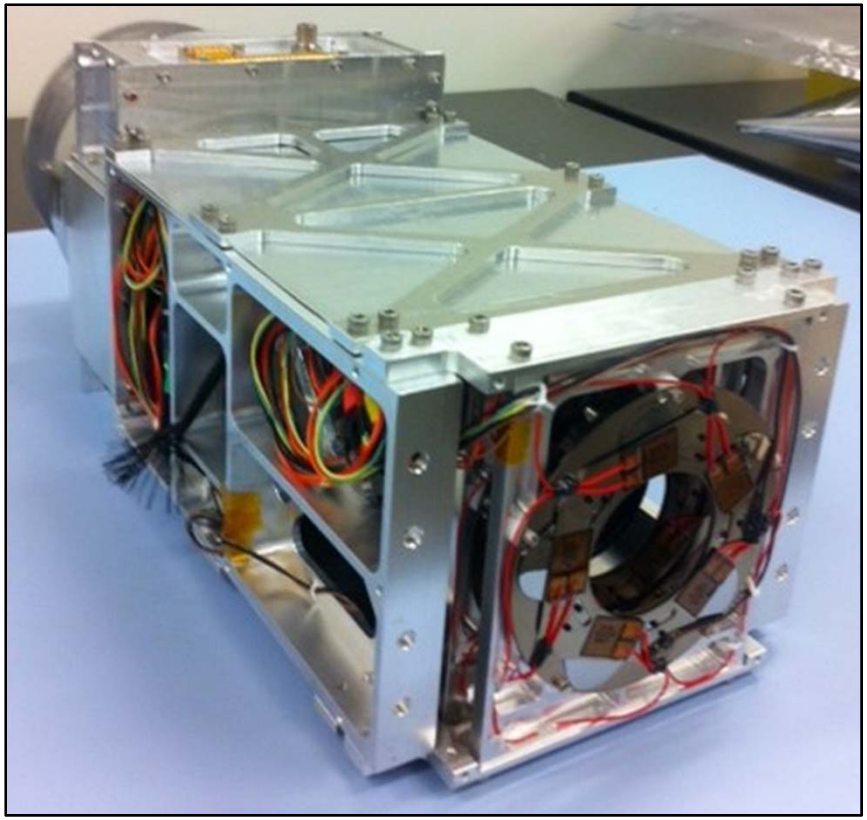

March 2014

As of today - TIRCIS prototype

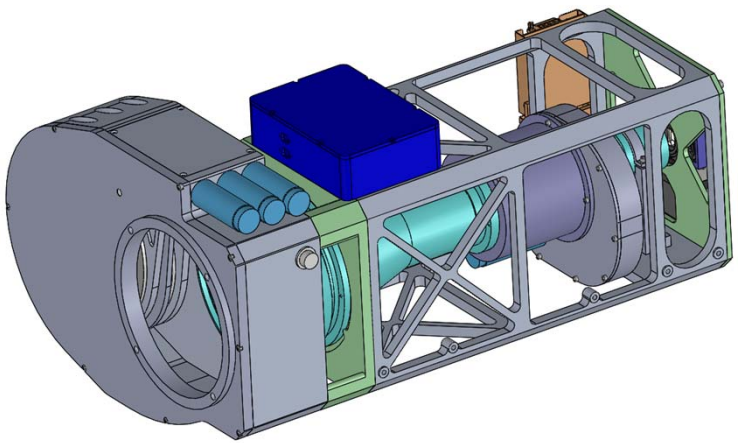

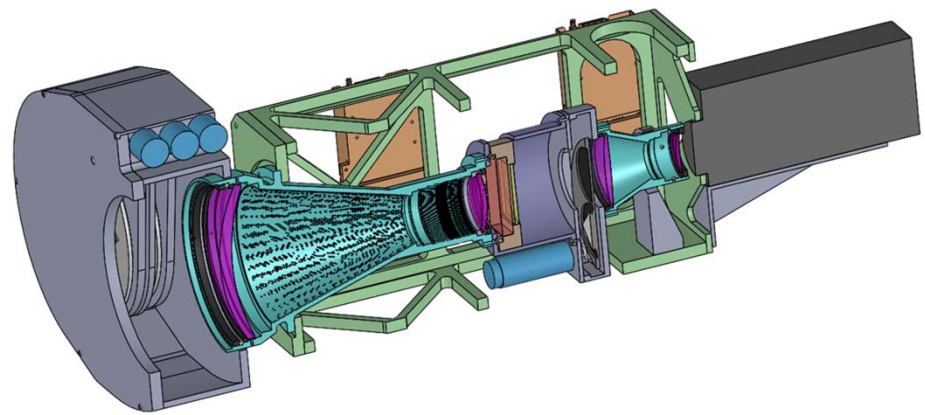

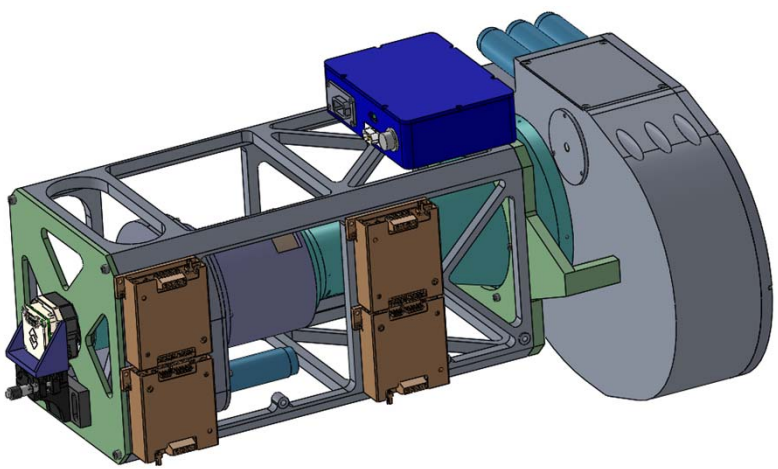

Volume = 66 cm × 35 cm × 25 cm
Mass = 7 kg

TIRCIS OPTICAL DESIGN

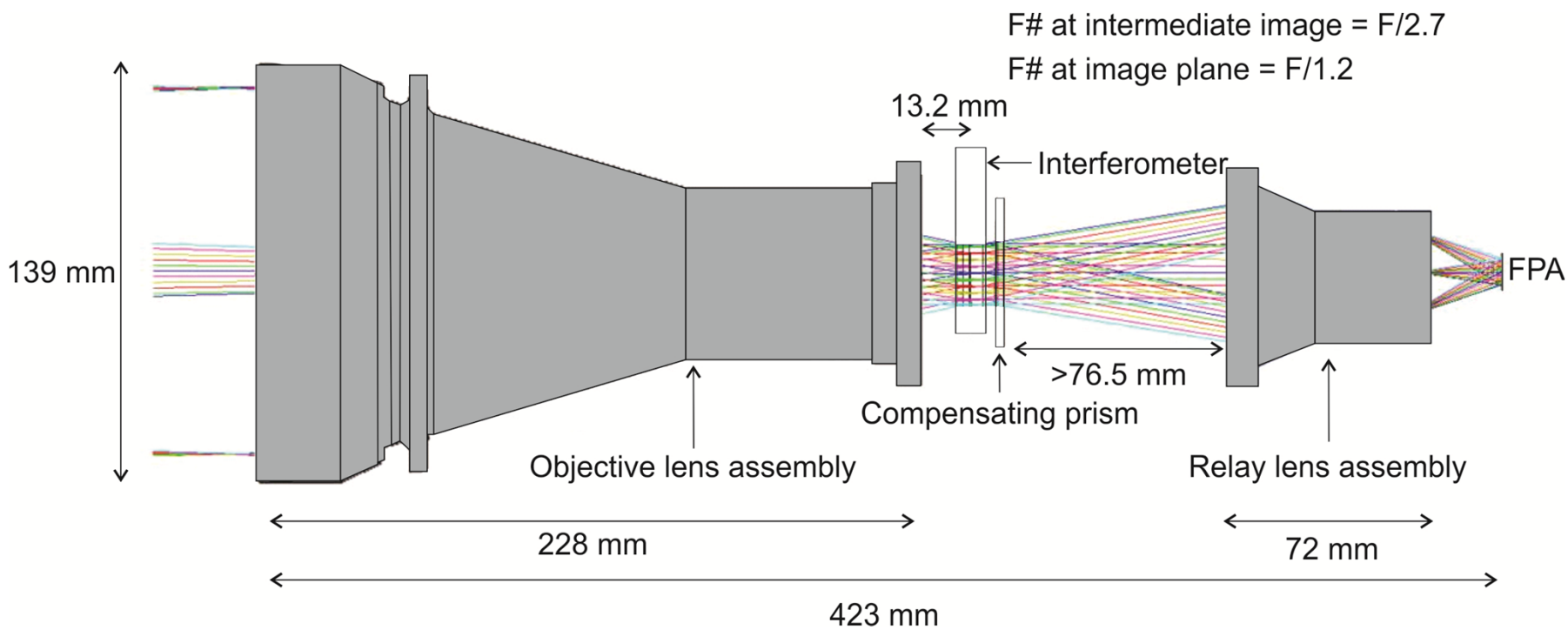

- Lenses designed to achieve 120 m GSD from 500 km orbit
- Fabry-Perot interferometer designed to eliminate vignetting

LENSES

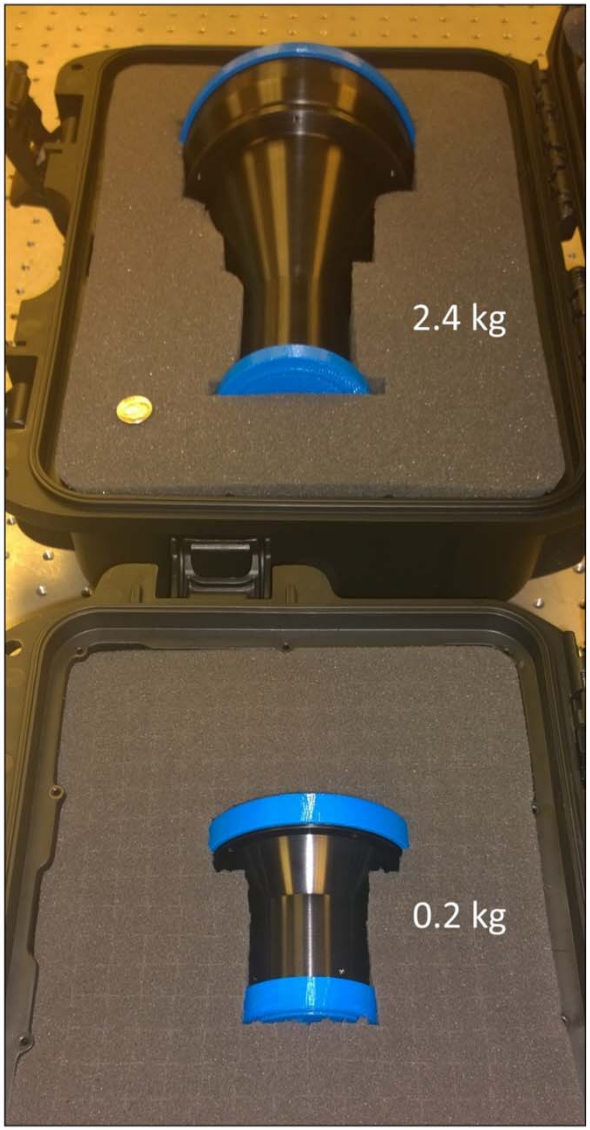

Lenses are:

i) Vented

ii) Potted with low-outgassing adhesive (Nusil CV-1142; -115 to 260° C; CVCM = 0.01%)

iii) Built to withstand representative launch environment

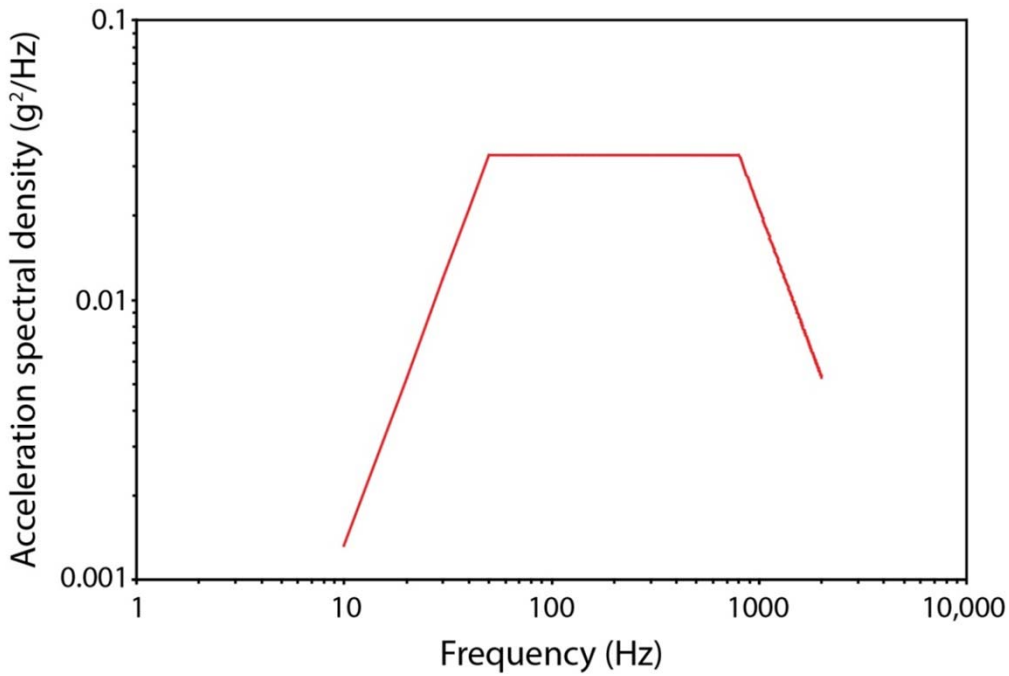

FABRY-PEROT INTERFEROMETER

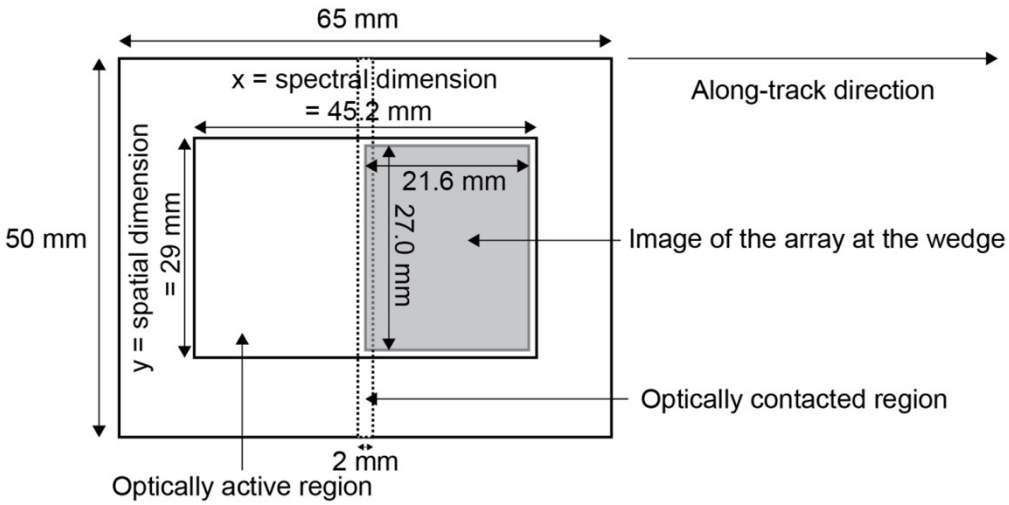

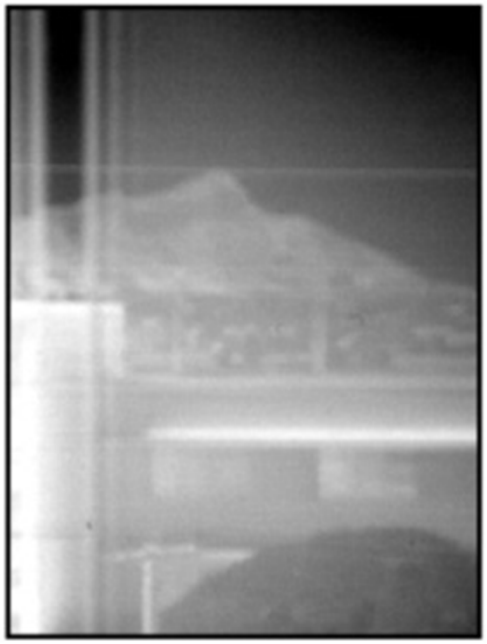

Image of Diamond Head, Honolulu, acquired by TIRCIS breadboard

- Three "wedges" designed to yield three different spectral resolutions
  - Interferometer #1 = 44 cm^{-1} ~ 15 wavebands between 8-14 μm
  - Interferometer #2 = 8.7 cm^{-1} ~60 wavebands between 8-14 μm
  - Interferometer #3 = 6.5 cm^{-1} ~90 wavebands between 8-14 μm

- Compensating prism(s) introduced into the design to eliminate vignetting

INTERFEROMETER AND COMPENSATING PRISMS

Interferometers are:

i) Potted with low-outgassing Epotek 301,

ii) Built to withstand representative launch environment

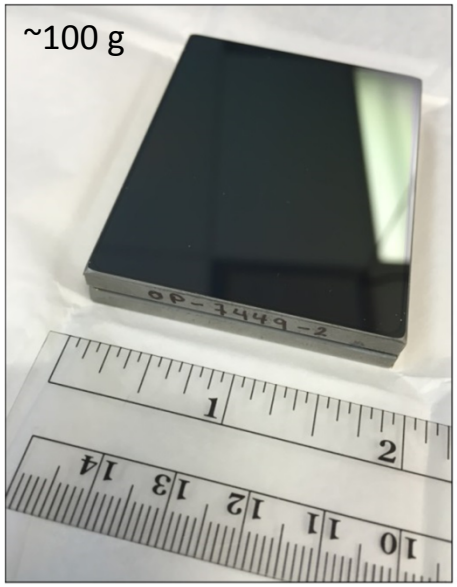

Low spectral resolution

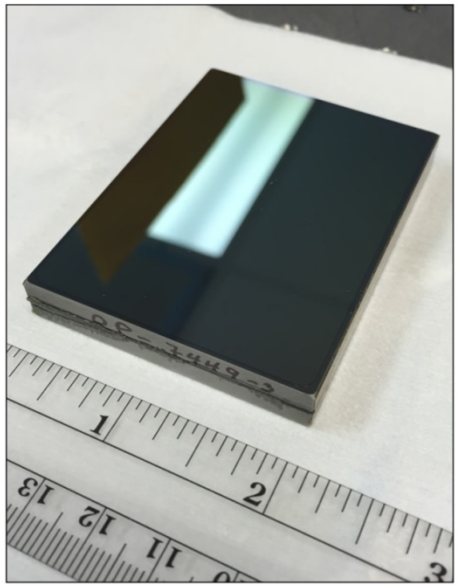

Optimal
spectral resolution

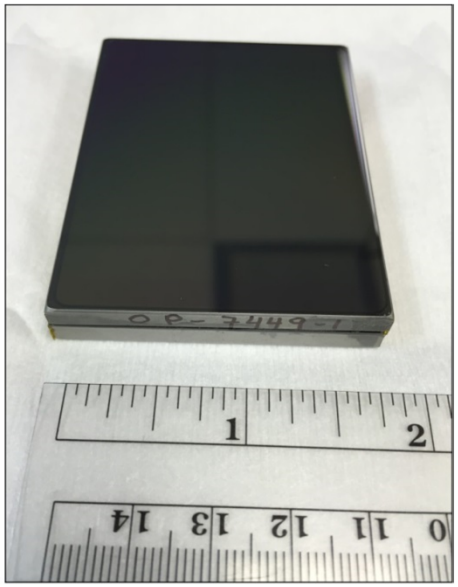

Near-Nyquist
spectral resolution

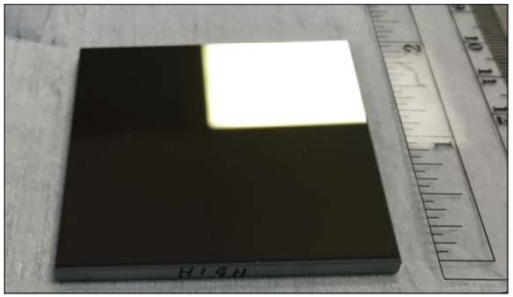

Low spectral resolution

Optimal
spectral resolution

Near-Nyquist
spectral resolution

Swapping the interferometers in/out for testing

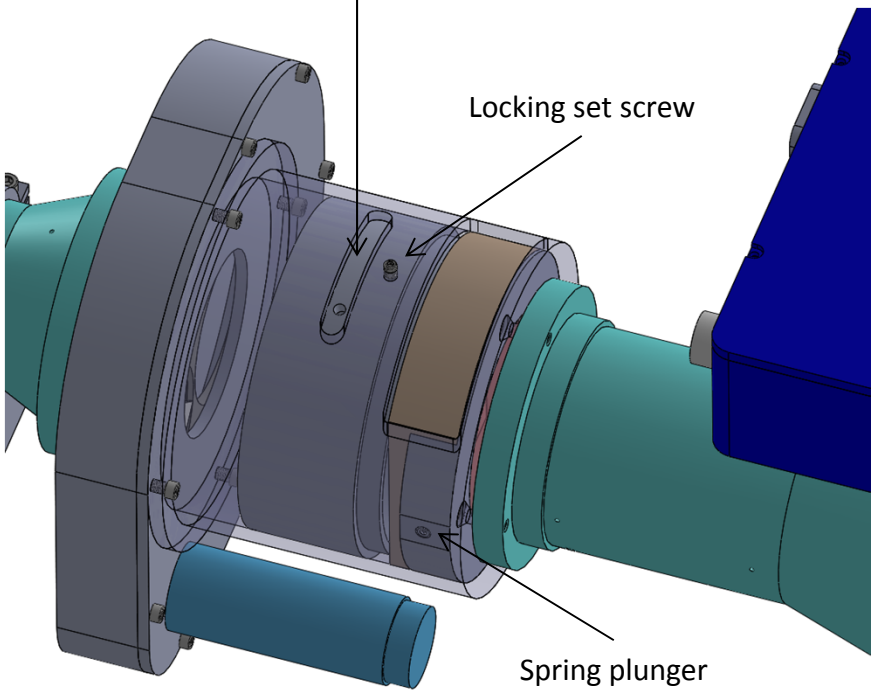

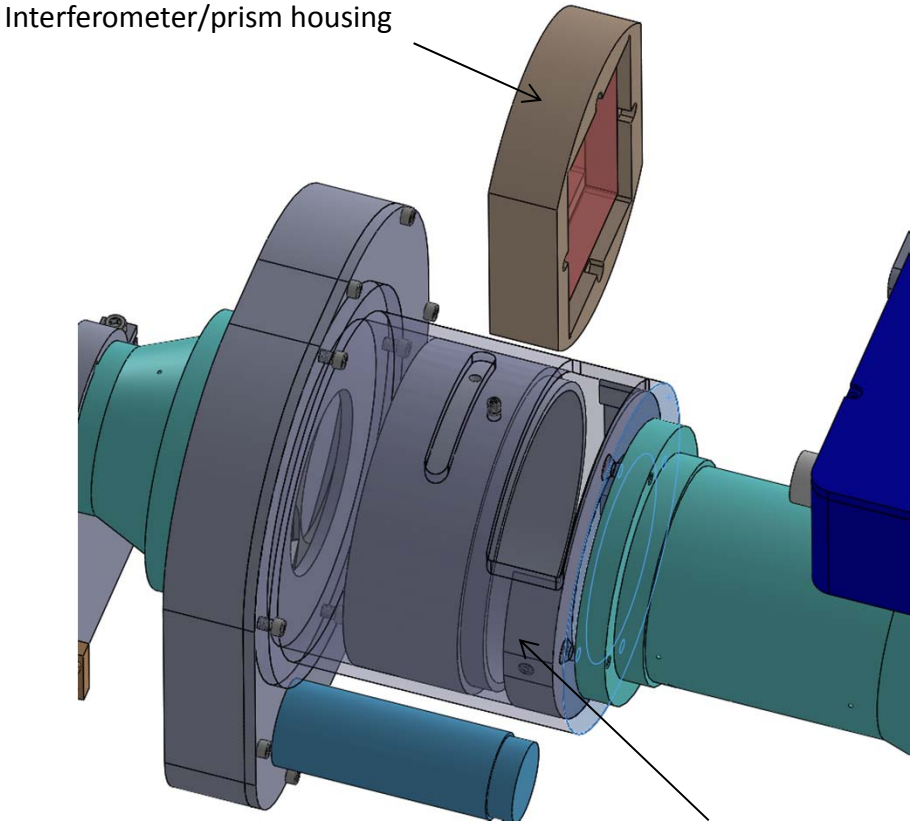

UNCOOLED MICROBOLOMETER CAMERAS

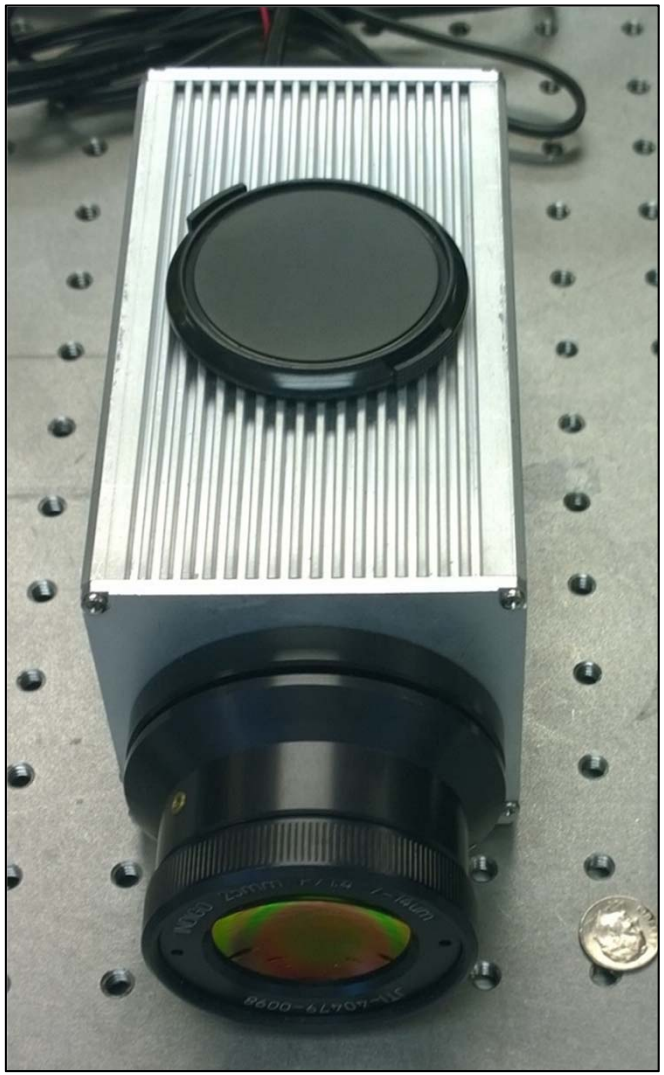

LumaSense MC320 (VOx; custom bolometers)

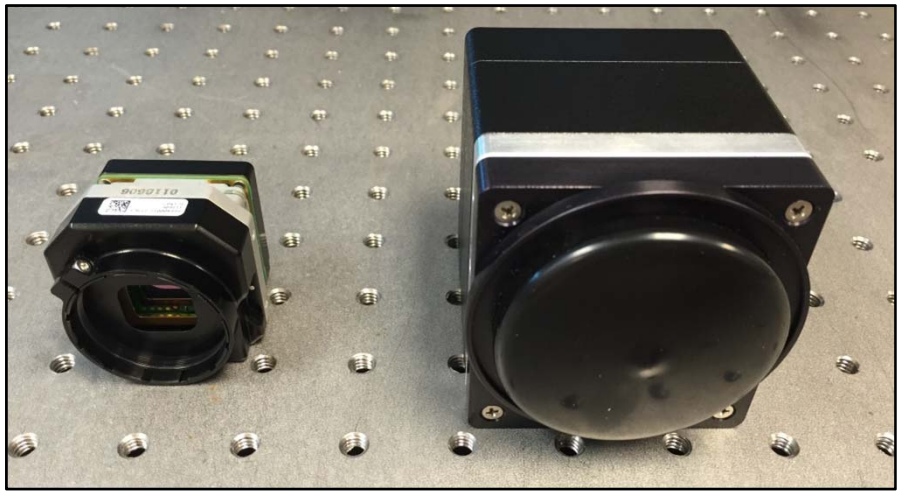

FLIR Tau (VOx) and SOFRADIR PV-640 (α-Si)

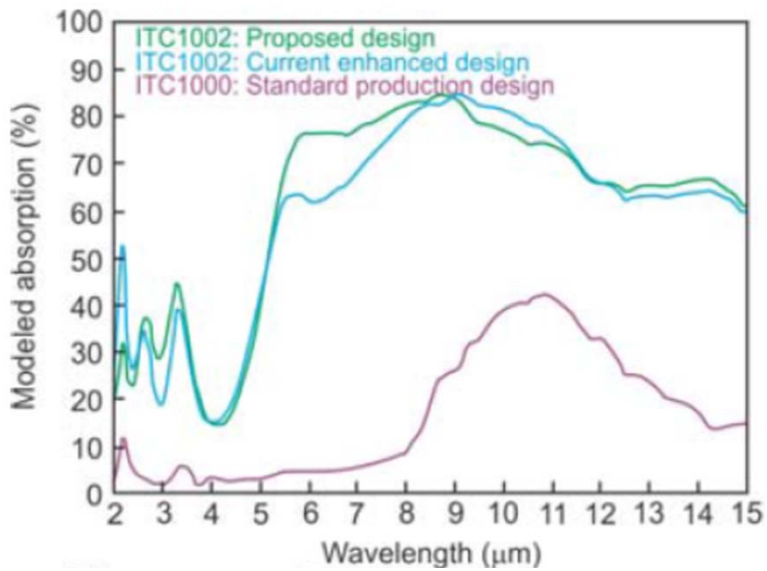

RADIOMETRIC CALIBRATION

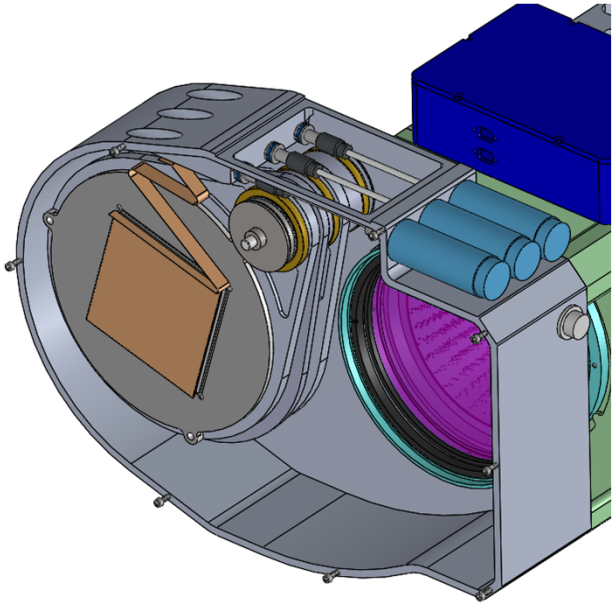

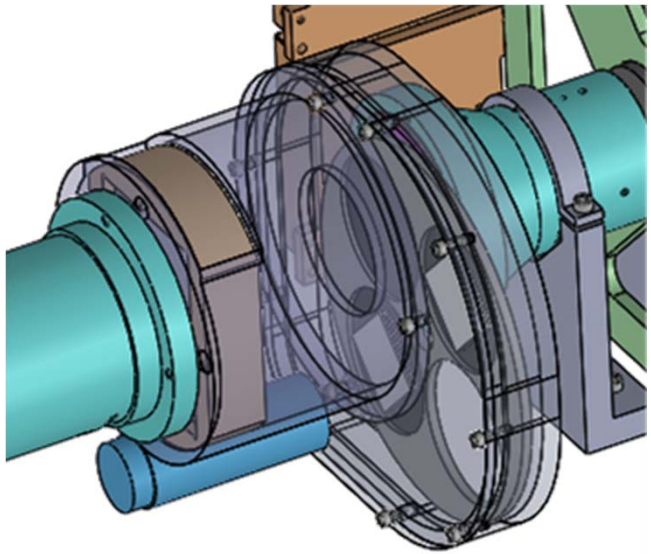

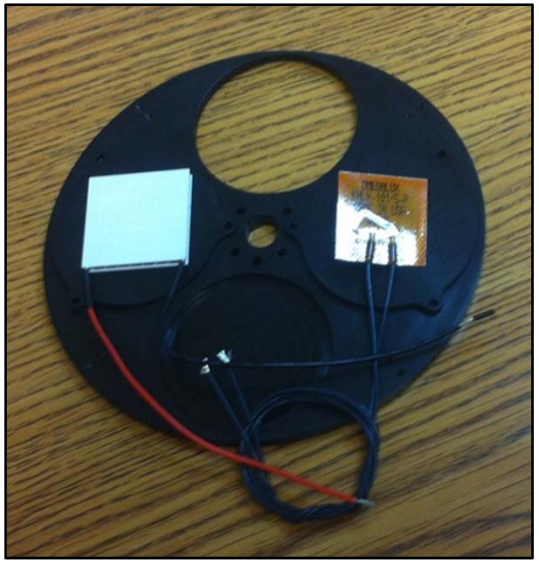

TIRCIS STRUCTURE

Mode shape 1. 222.98 Hz

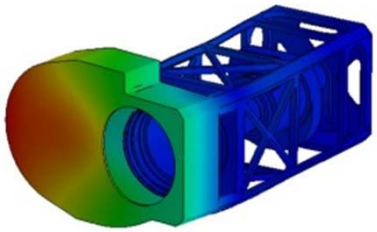

Mode shape 2. 352.48 Hz

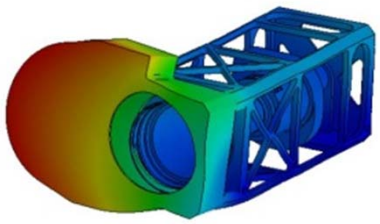

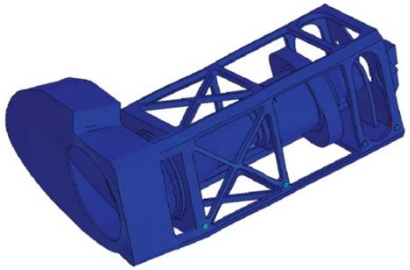

<u>Deformation</u>

Maximum displacement = 0.05 mm (at primary calibrator) and 0.02 mm for optical elements (at the camera)

<u>Stress</u>

Maximum = 5000 psi (yield strength of material = 8000 psi)

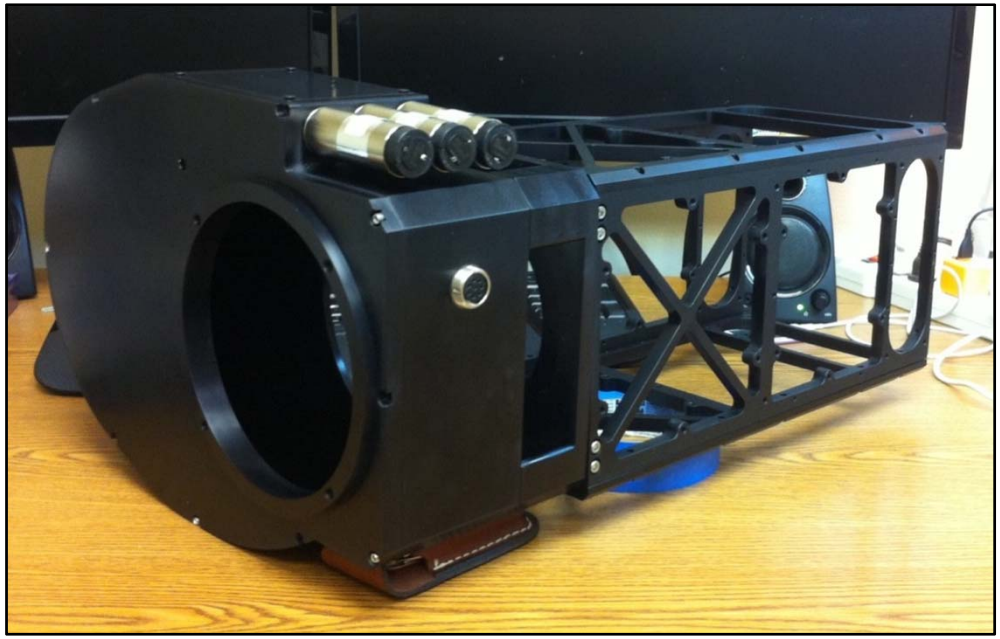

SOFTWARE – INSTRUMENT CONTROL AND DATA PROCESSING

SCIENCE APPLICATION: PREDICTING VOLCANIC ERUPTIONS

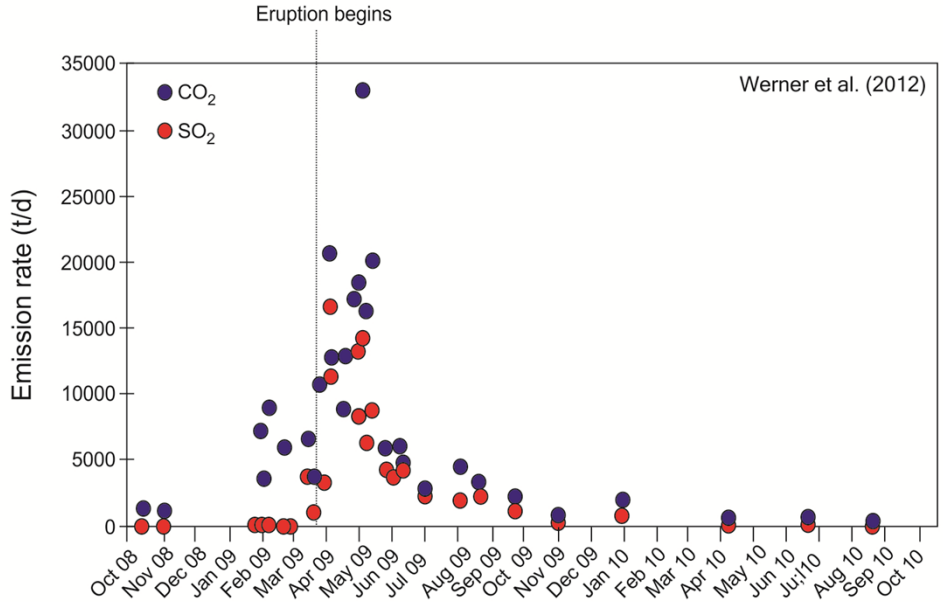

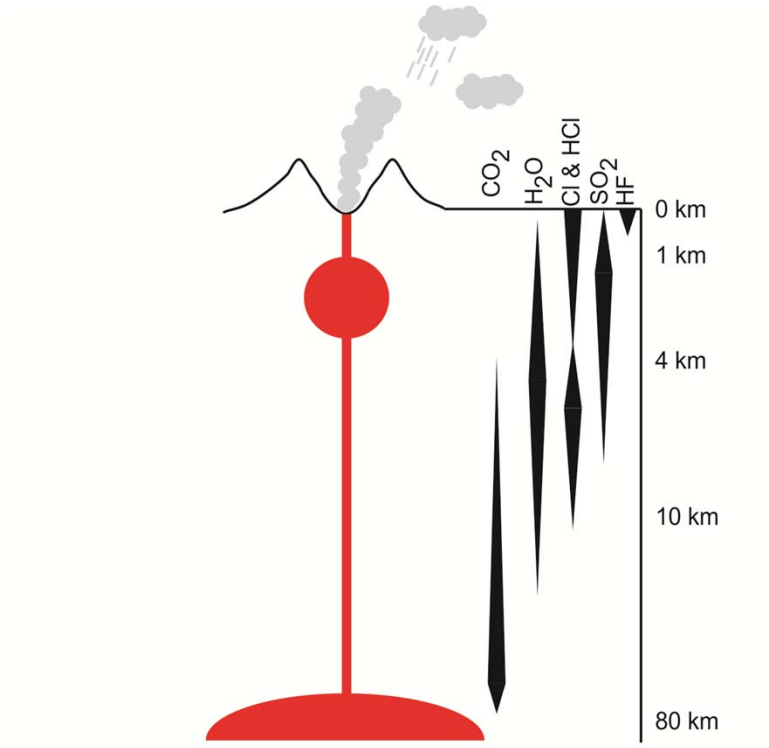

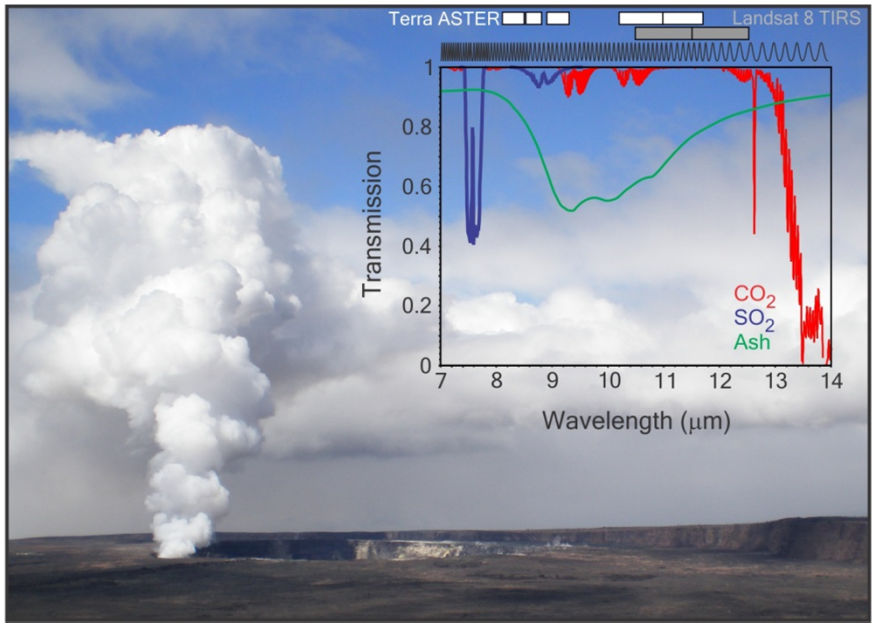

THE TRANSMITTANCE OF VOLCANIC GASES

0 ppmv SO_2, 400 ppmv CO_2, 1 km horizontal path length

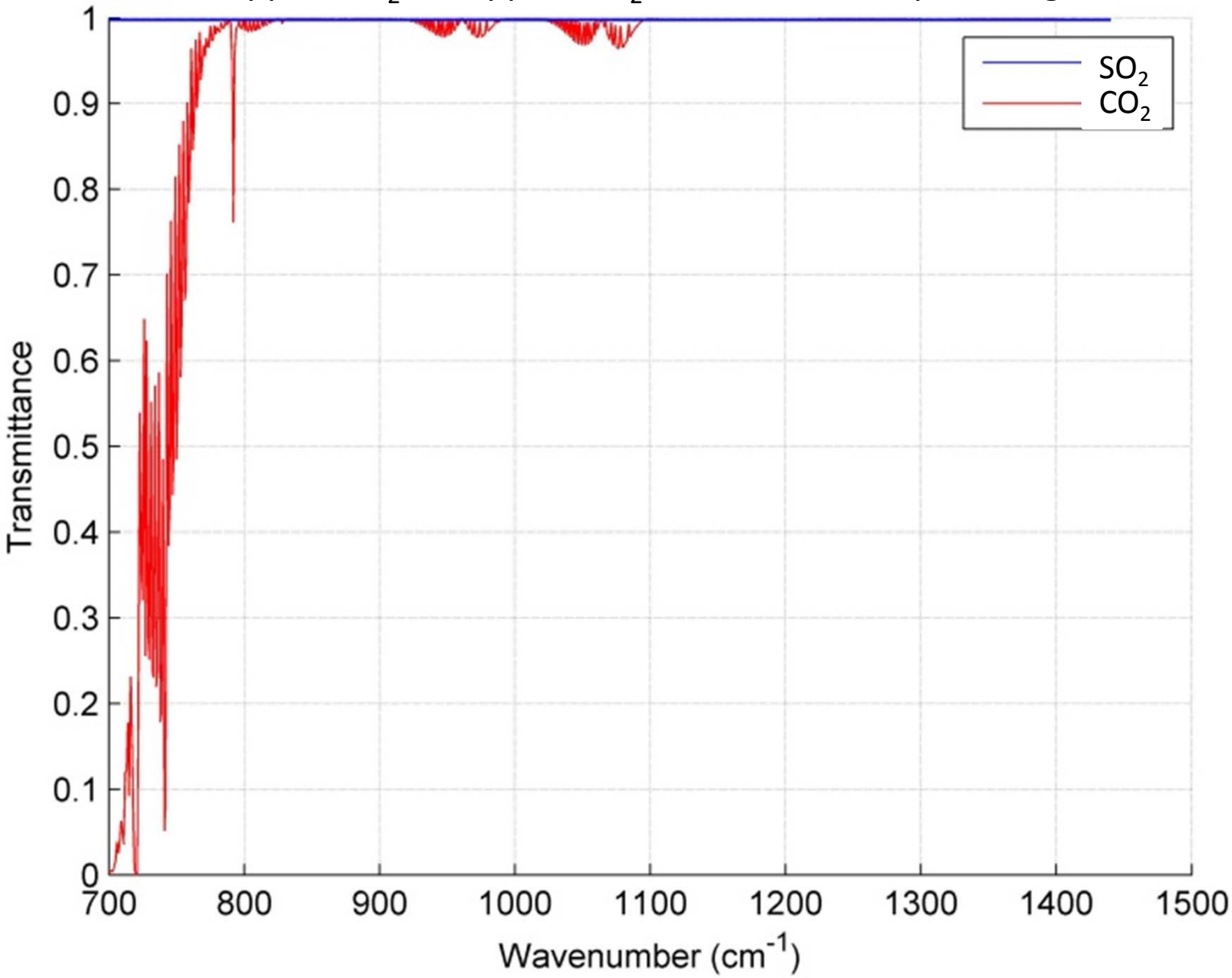

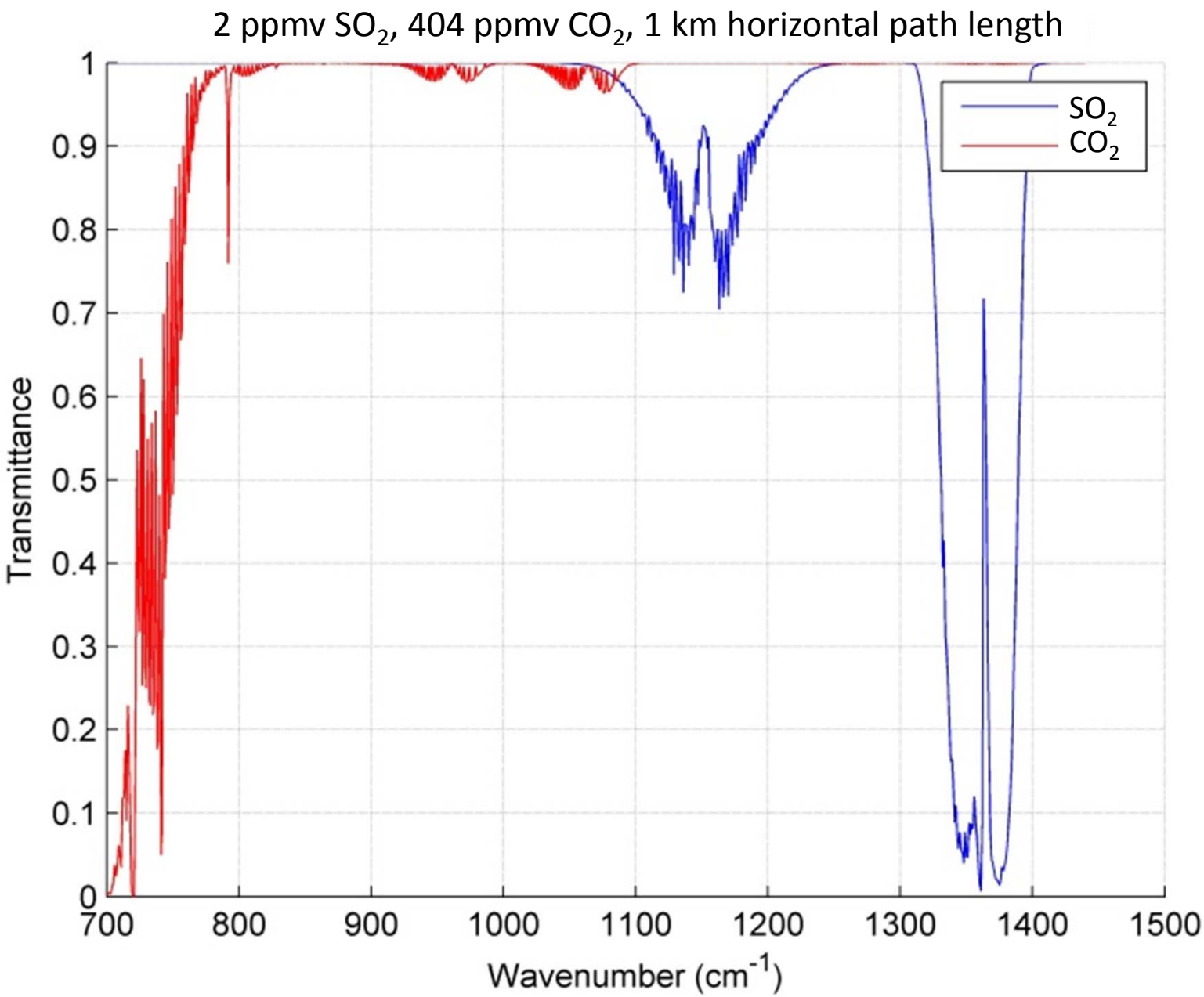
2 ppmv SO_2, 404 ppmv CO_2, 1 km horizontal path length
Transmittance
Wavenumber (cm^{-1})
SO_2
CO_2
0
0.1
0.2
0.3
0.4
0.5
0.6
0.7
0.8
0.9
1
700
800
900
1000
1100
1200
1300
1400
1500

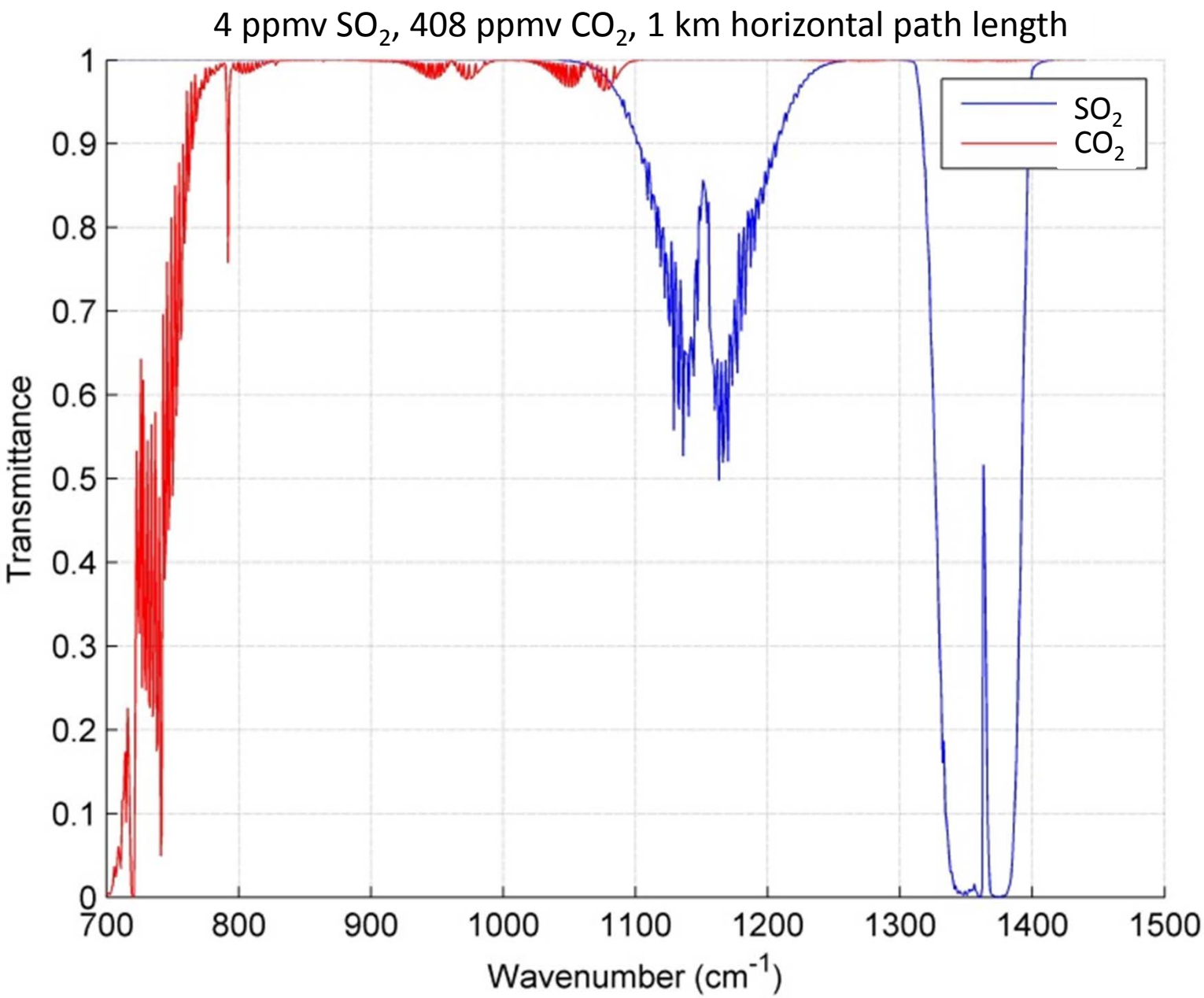
4 ppmv SO2, 408 ppmv CO2, 1 km horizontal path length
Transmittance
Wavenumber (cm-1)
SO2
CO2
0
0.1
0.2
0.3
0.4
0.5
0.6
0.7
0.8
0.9
1
700
800
900
1000
1100
1200
1300
1400
1500

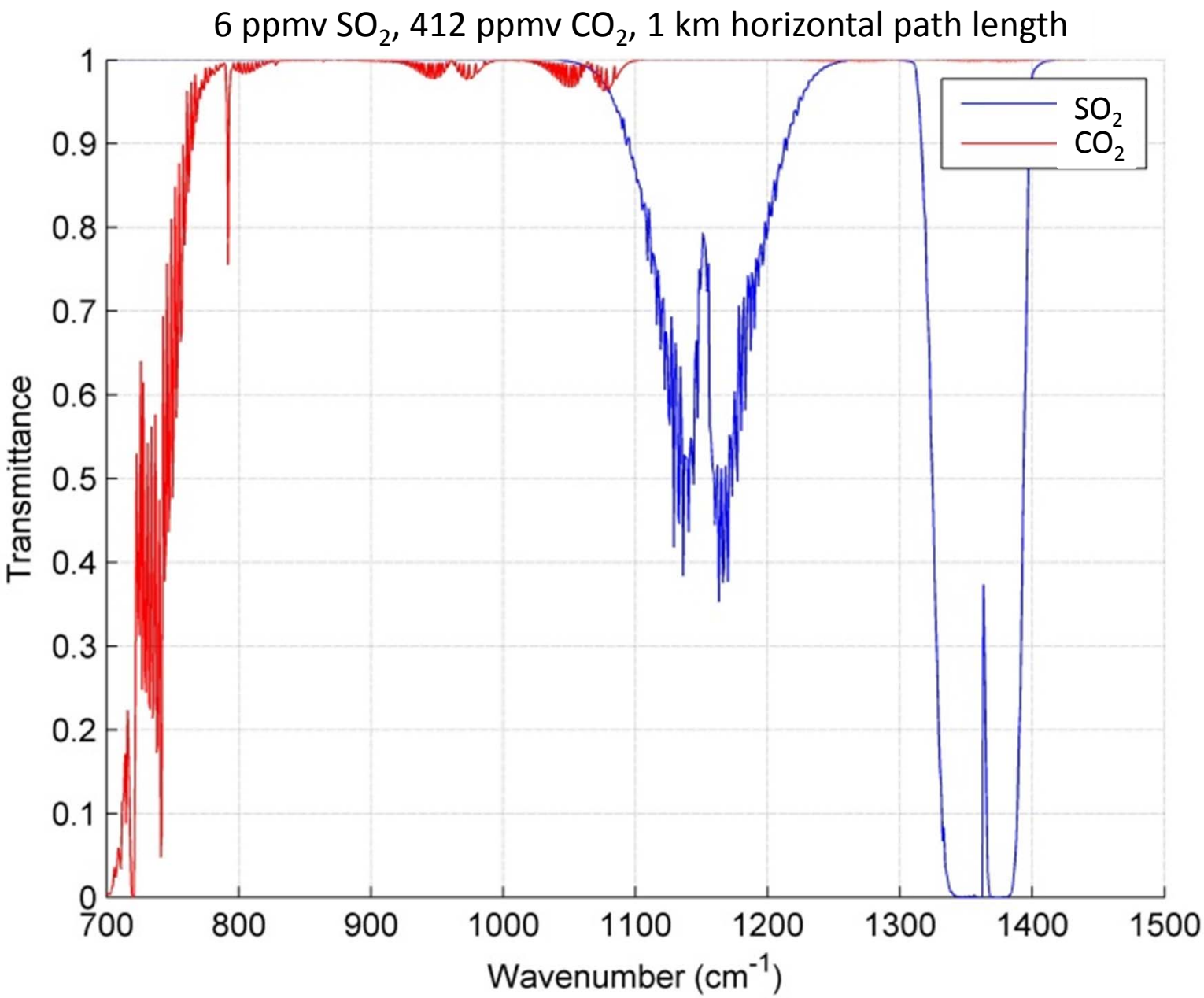
6 ppmv SO2, 412 ppmv CO2, 1 km horizontal path length
Transmittance
Wavenumber (cm-1)
SO2
CO2
0
0.1
0.2
0.3
0.4
0.5
0.6
0.7
0.8
0.9
1
700
800
900
1000
1100
1200
1300
1400
1500

SIMULATING VOLCANIC GAS PLUMES

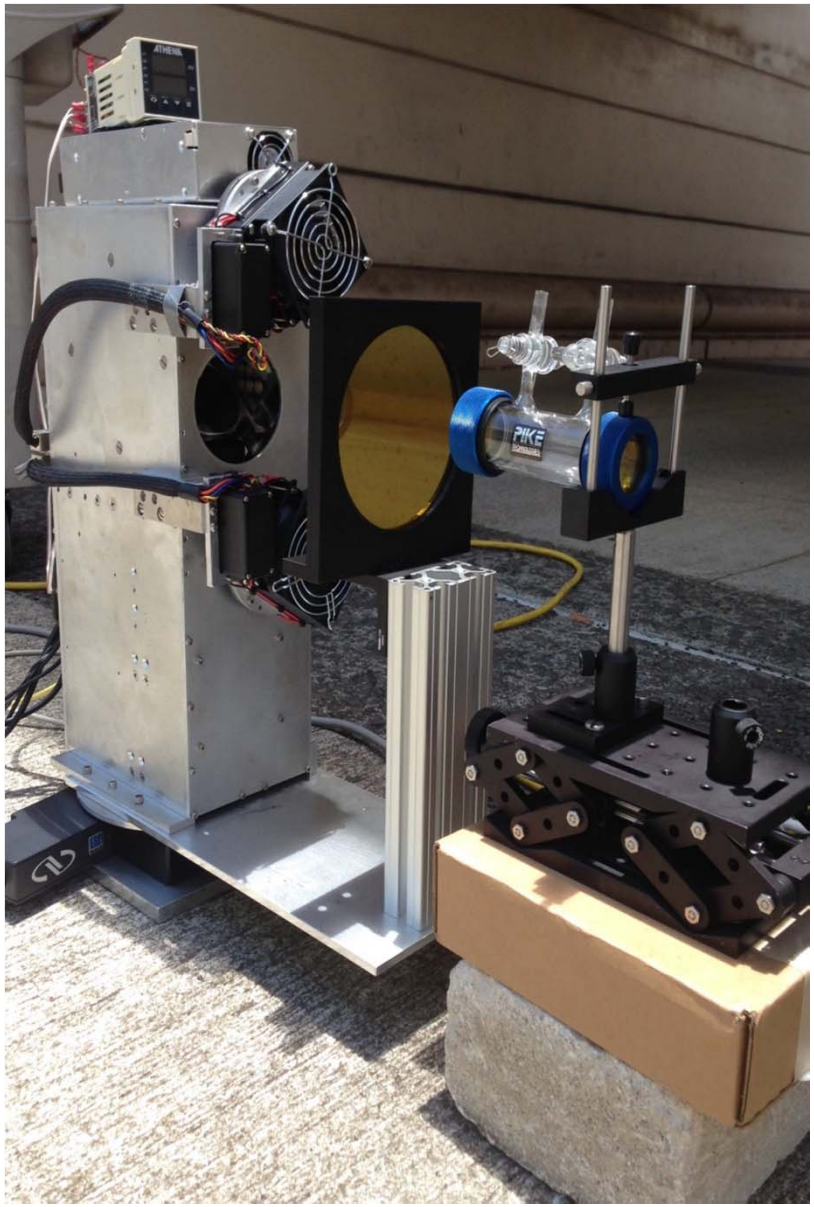

INITIAL RESULTS

Observations of SO_2 using a blackbody (transmission)and the sky (emission) as background

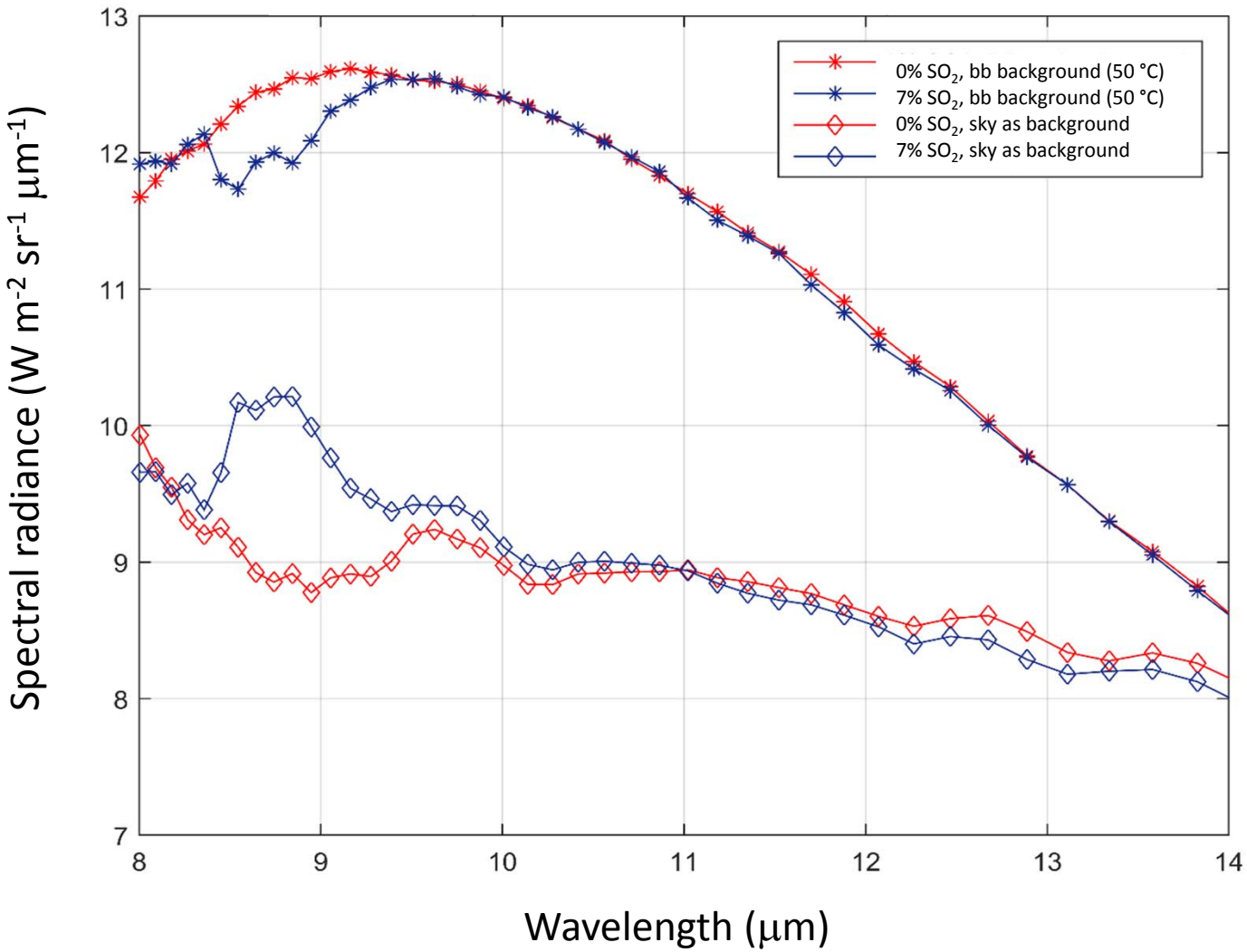

Observations of transmission spectra of SO_2 with MODTRAN simulations

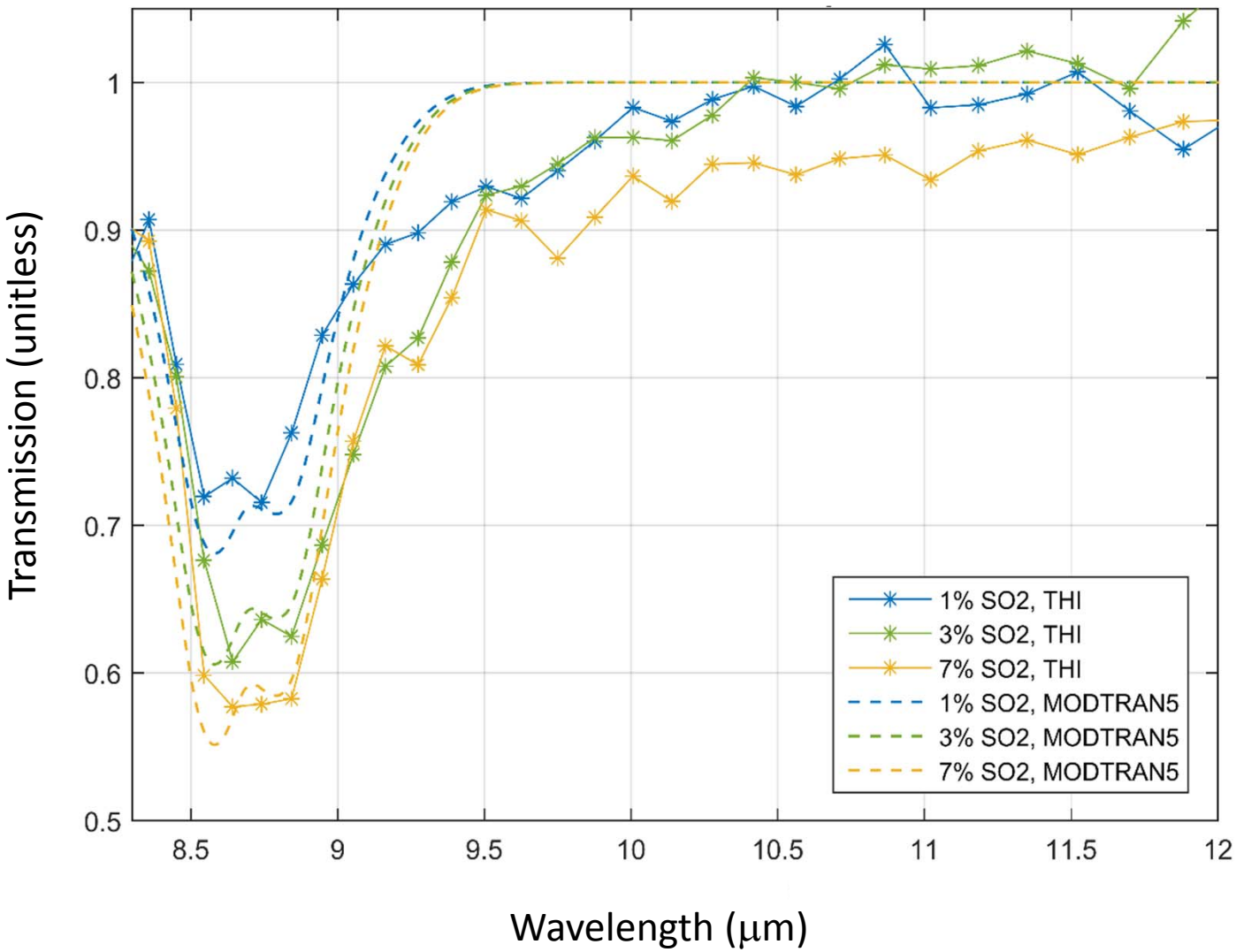

FUTURE APPLICATIONS OF THE INSTRUMENT

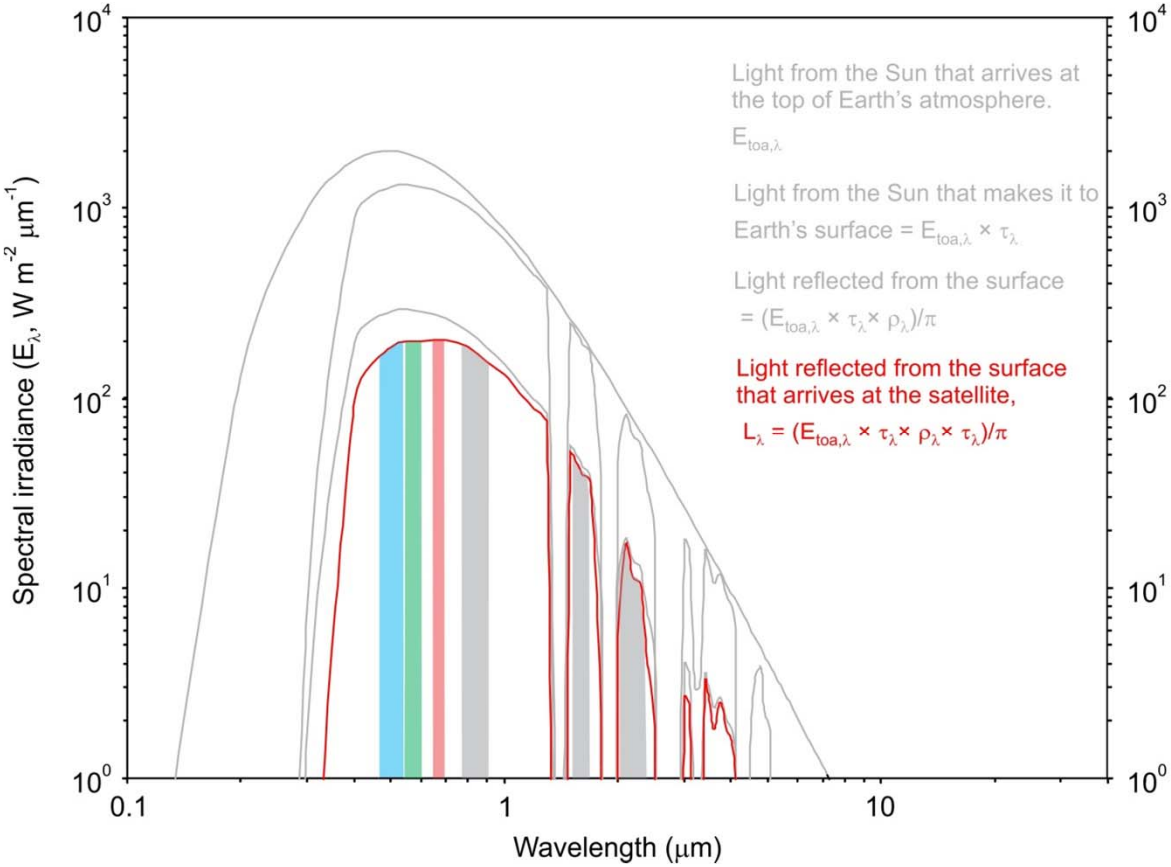

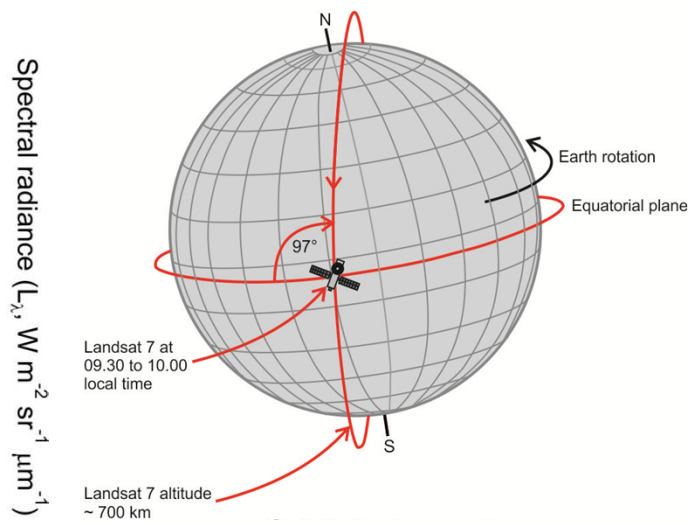

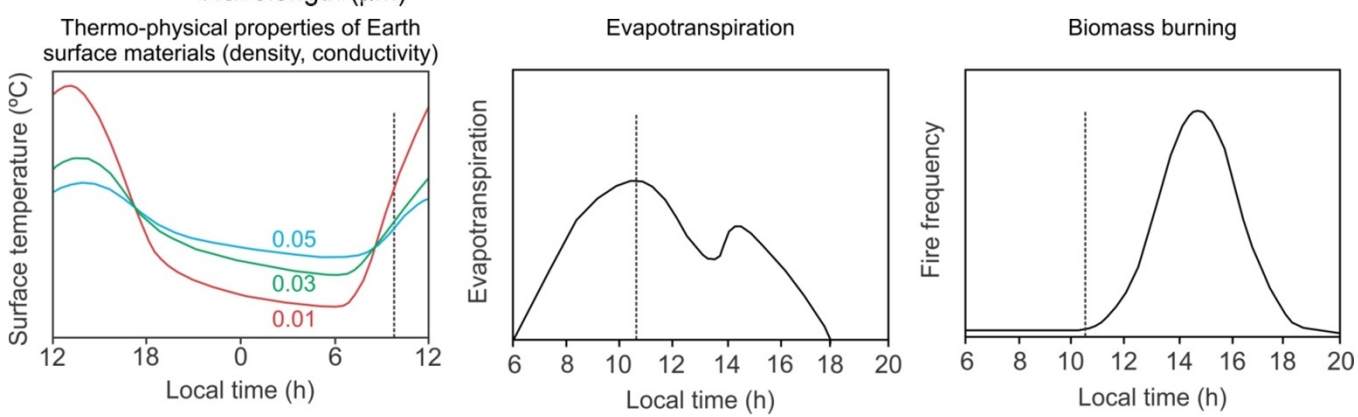

FUTURE APPLICATIONS OF THE INSTRUMENT

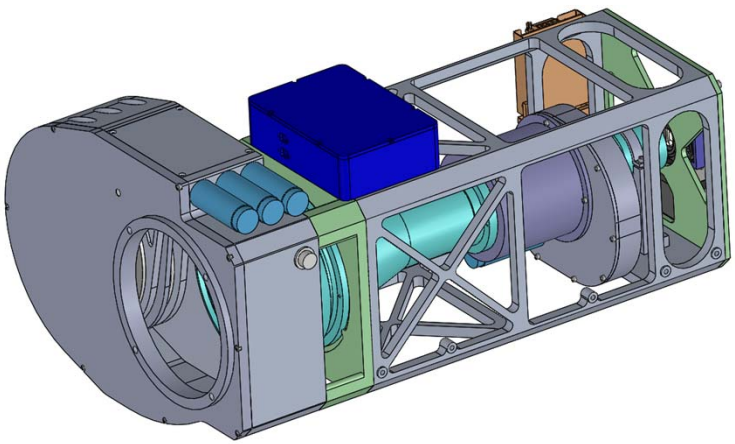

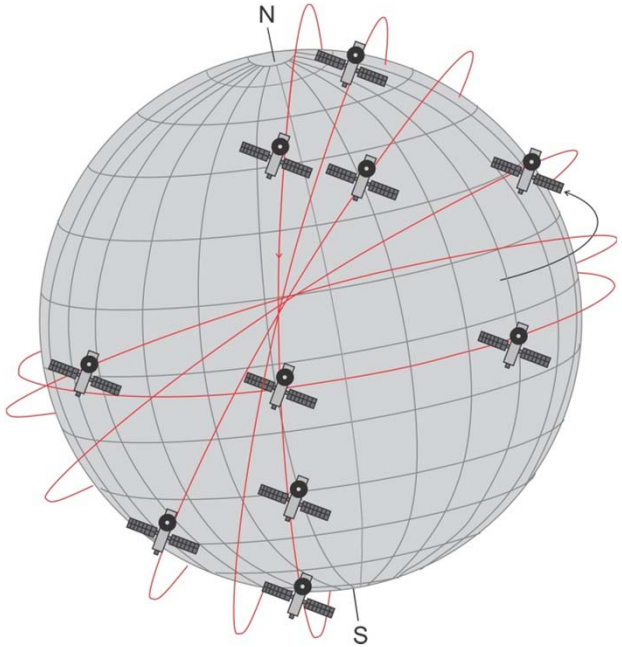

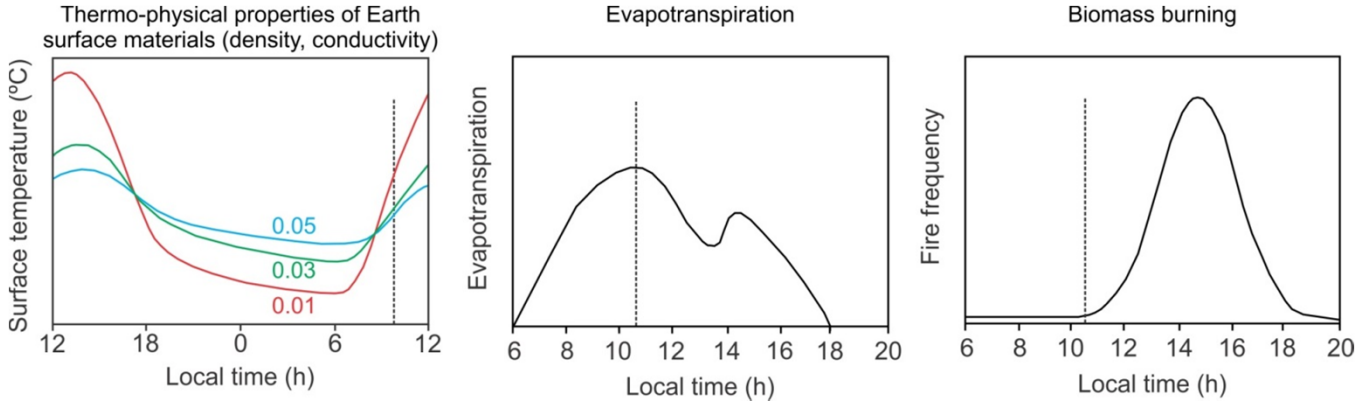

SUMMARY – THE AIMS OF THE PROJECT

- Imaging interferometry can provide high spatial, high spectral, and high temporal resolution image data for quantifying the chemical composition of targets

- TIRCIS will provide ~50 spectral measurements in the 8-14 μm window, using a micro-satellite compatible design, with applications as diverse as monitoring volcanic gas and ash clouds, measuring soil moisture content, and mapping urban heat islands

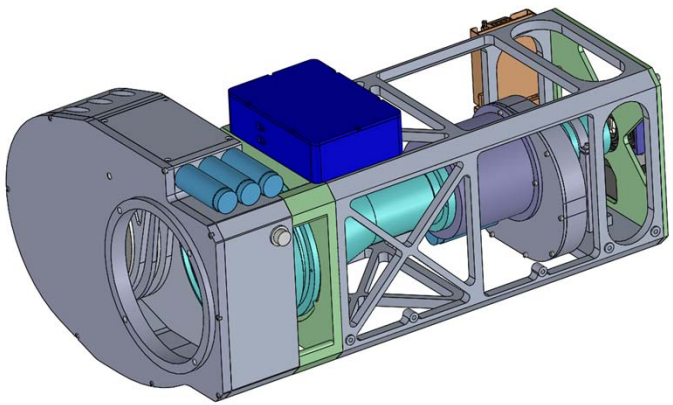

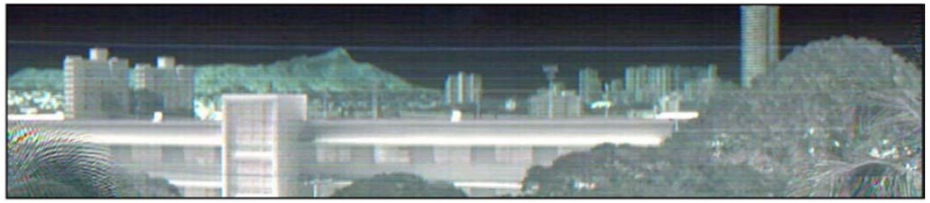

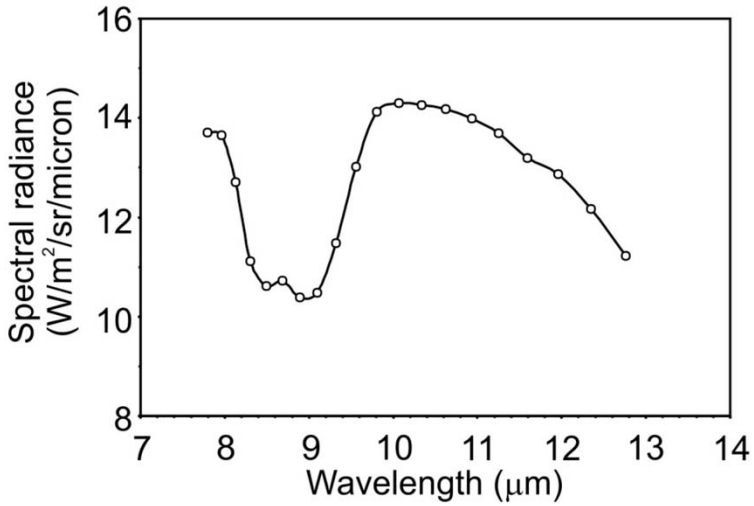

SUMMARY – STATUS
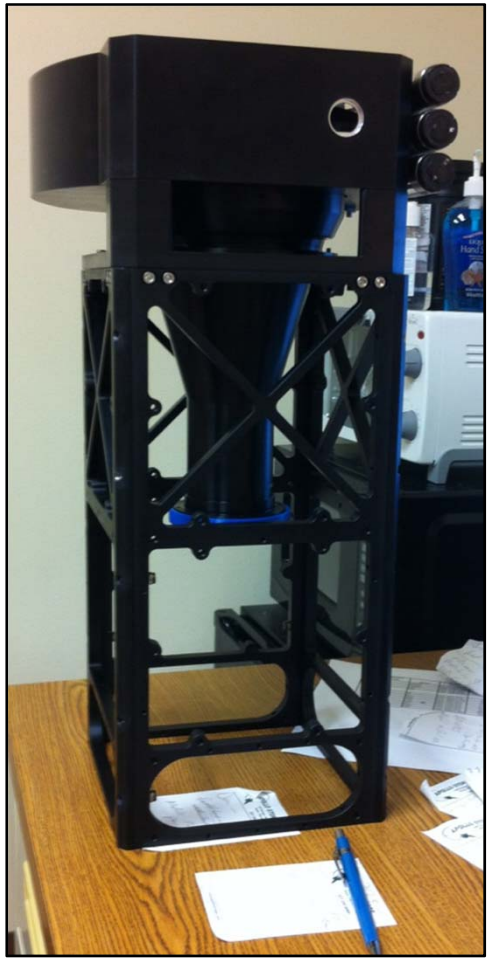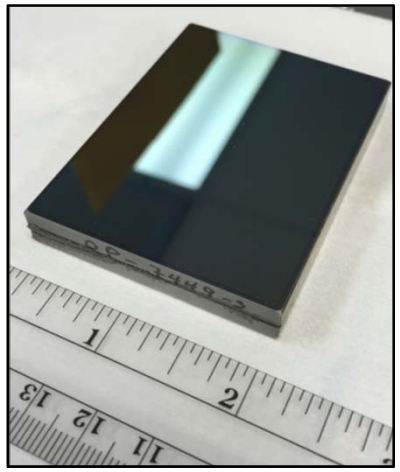
- Final assembly and fabrication is underway and prototype should be ready for characterization and testing by mid-August 2015