Deployable Optics for Earth Observing Lidar Instruments

Prof. Lee D. Peterson
Dr. Jason D. Hinkle
University of Colorado

Dr. Syed Ismail
NASA Langley Research Center

Presented at the
NASA Earth Science Technology Conference
Palo Alto, California
22 June 2004

Research Sponsored by
NASA Earth Science Technology Office
Advanced Component Technology Program
Contract No. NAS1-03009

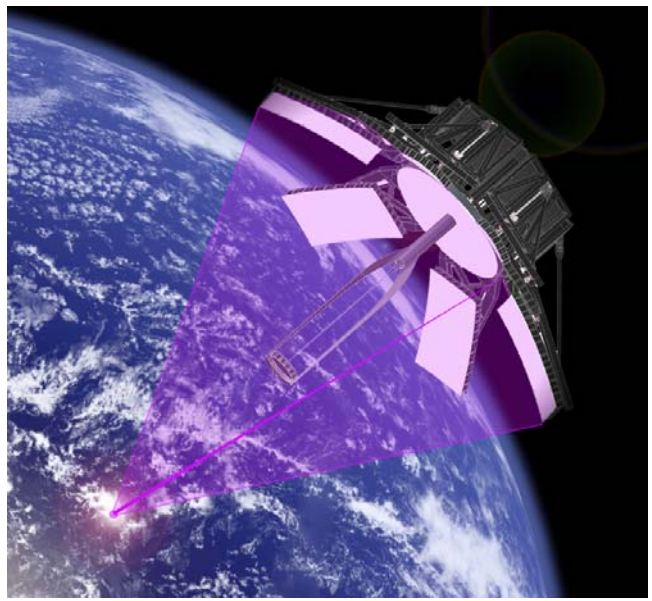

Presentation Outline

- Background and Project Overview
- Relevance and Impact
- Component Verification Experiments
- Sub-System Verification Experiments
- Theoretical Modeling
- Conclusions

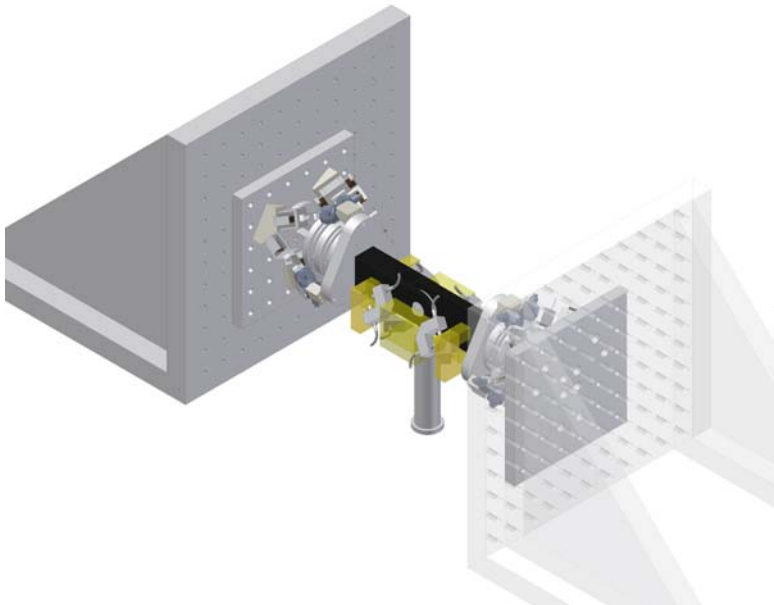

Project Background

- University of Colorado (CU) is teamed with NASA LaRC on
  - ESTO Advanced Component Technology (ACT) project

    "Deployable Optics Modeling Experiments (DOME)"

    Contract NAS1-03009
- Project status
  - End of year 1 (of 3 years total)
  - CDR of major experimental hardware in spring 2004
- Project objective is to advance key technology for deployment of Earth-observing LIDAR telescopes

  Precision deployment, microdynamic stabilization and modeling technologies verified through experiments
- Project embodies 10 years of development effort aimed at deployable optical structures

Some Background, History and Perspective

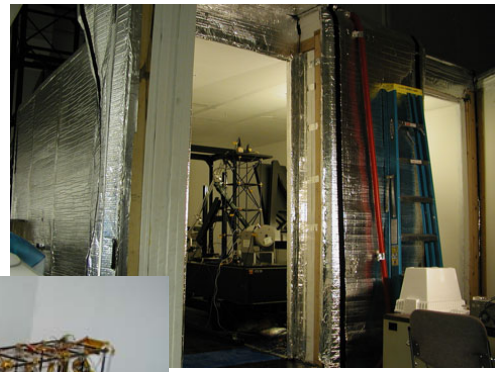

Micro-Lurch

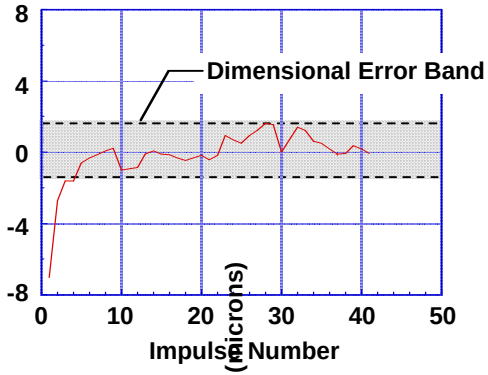

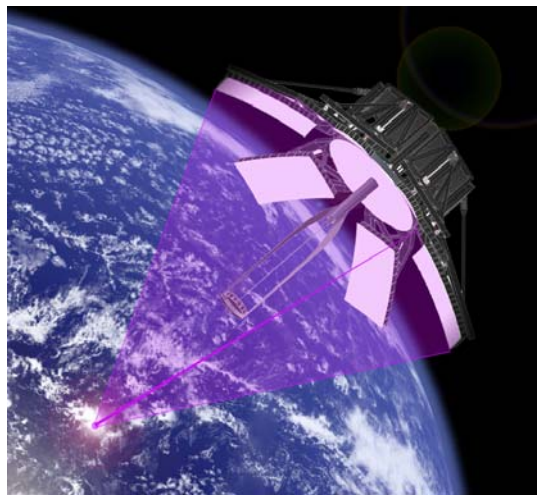

Microdynamics

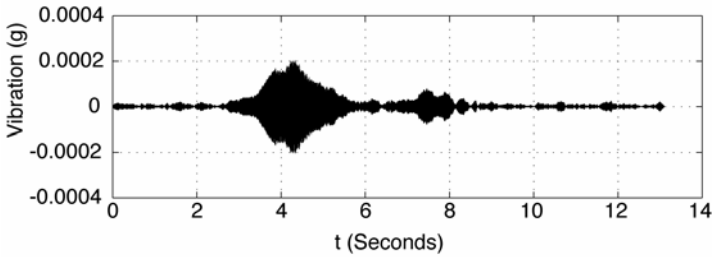

MADE

Structural Models at Nanometer Scale

http://sdcl.colorado.edu

Where is the state of the art in precision deployable optics?

- **What we know …**

  Low cost, low mass mechanisms (hinges and latches) can be designed that enable deployed "thickness" or "depth" support structures with 10-100 times better stability and stiffness.

- **What we think we know …**

  Optical-scale, system-wide static, dynamic, and microdynamic stability can be achieved through careful analysis and design of the mechanisms and the structure.

- **What we think …**

  Deployed telescopes up to 10 meters in diameter might be developed in which the error due to mechanisms is comparable to or smaller than the error due to material effects and thermoelasticity.

DOME Project Elements

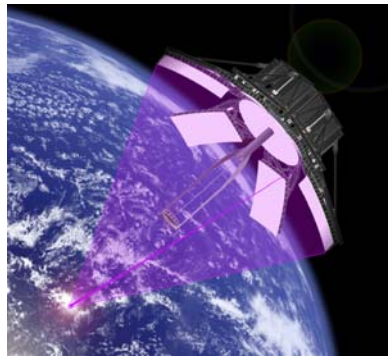

System Concept

Sub-System Experiment

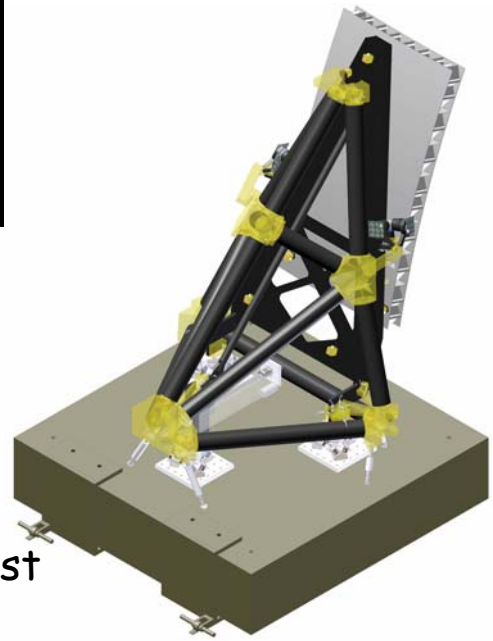

- Overall Objective
  - Develop and validate precision deployment technology for low-cost, optical-UV Lidar telescopes
- Develop new optical precision deployment technology
  - 10:1 to 100:1 improvement in structural performance

    Would minimize the need for active optical figure control
- Validate technology in component tests and a sub-system test
  - Component tests of mechanical hinges and latch
  - Sub-system test of a single petal and mirror segment
- Use integrated structural-optical models to extrapolate to full system flight behavior

DOME-Derived Flight System Concept

- Low cost deployed lidar telescope mirror
  - Pegasus-size package (2:1 deployed diameter)
  - Equivalent to Delta-II-size undeployed mirror
  - Saves tens of $M in launch costs
- Eliminates need for figure control of deployed petals
  - 10:1 to 100:1 improvement in structural performance through deployed depth reaction structure
- Mitigates higher power laser issues:
  - 4-10 times improvement in sensitivity
  - Power, size, cost, and risk
  - Heat dissipation
  - Eye-safety

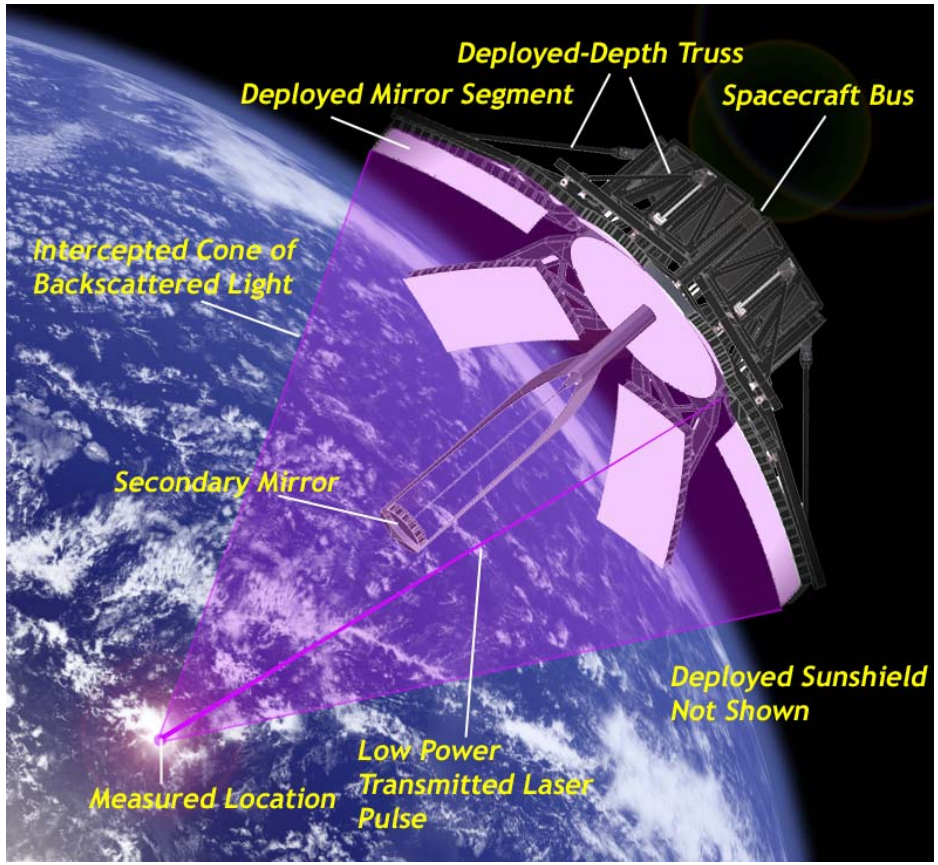

Stowed

Deployed

DOME impacts key Earth Science missions

- Enables
  - Global tropospheric DIAL profiling of O3, H2O and CO2 with day or night coverage, absolute measurements and direct inversion capability
- Enhances
  - Global scale lidar profiles of aerosol and cloud optical and microphysical properties
  - Global wind (direct detection)
  - Global oceanographic lidar
- Applications
  - Better understanding of Earth's atmospheric system
  - Improves capability for predicting climate and weather
  - Atmospheric composition and dynamics, and air quality
  - Water and energy and global carbon cycles

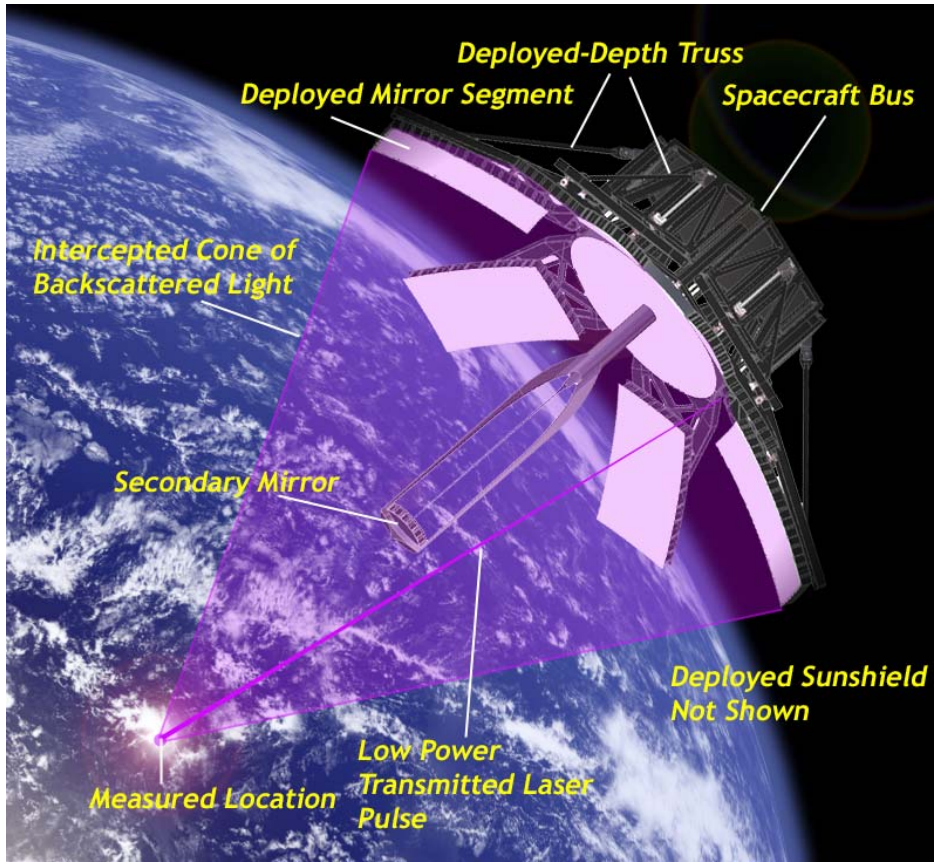

DOME Technology also impacts any Earth Science or Space Science mission that requires a deployed optic.

Structural "depth" or "thickness" is a key to overall structural stability

JWST Mirror Deployment

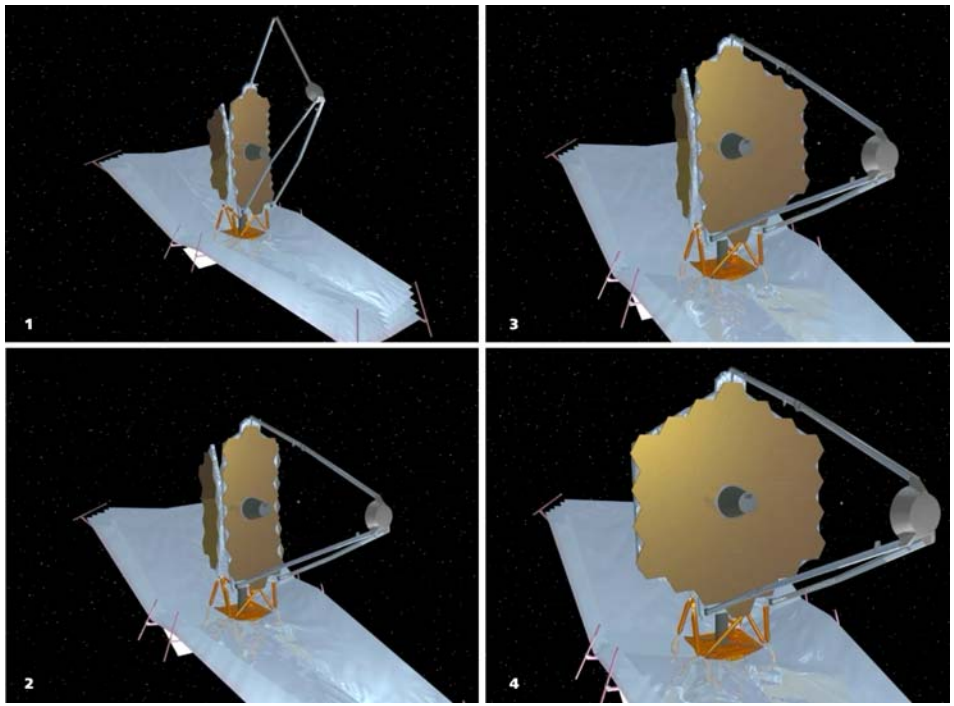

http://jwstsite.stsci.edu/gallery/deploy_graphics/lg_mirror_deploy.tif (2003-09-09)

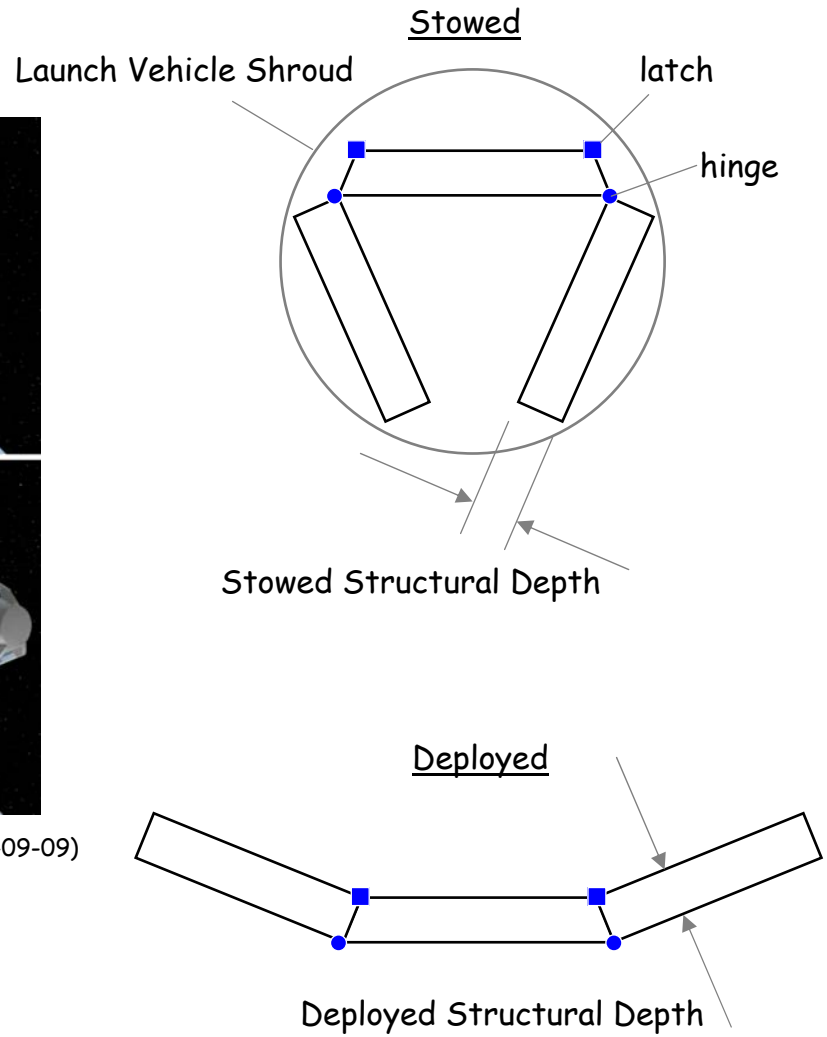

DOME will enable a folding scheme with deployed structural depth

Stowed

Deployed

Key to deployed depth: More degrees of freedom → More mechanisms

DOME technology intends to make deployed optics as stable as undeployed optics

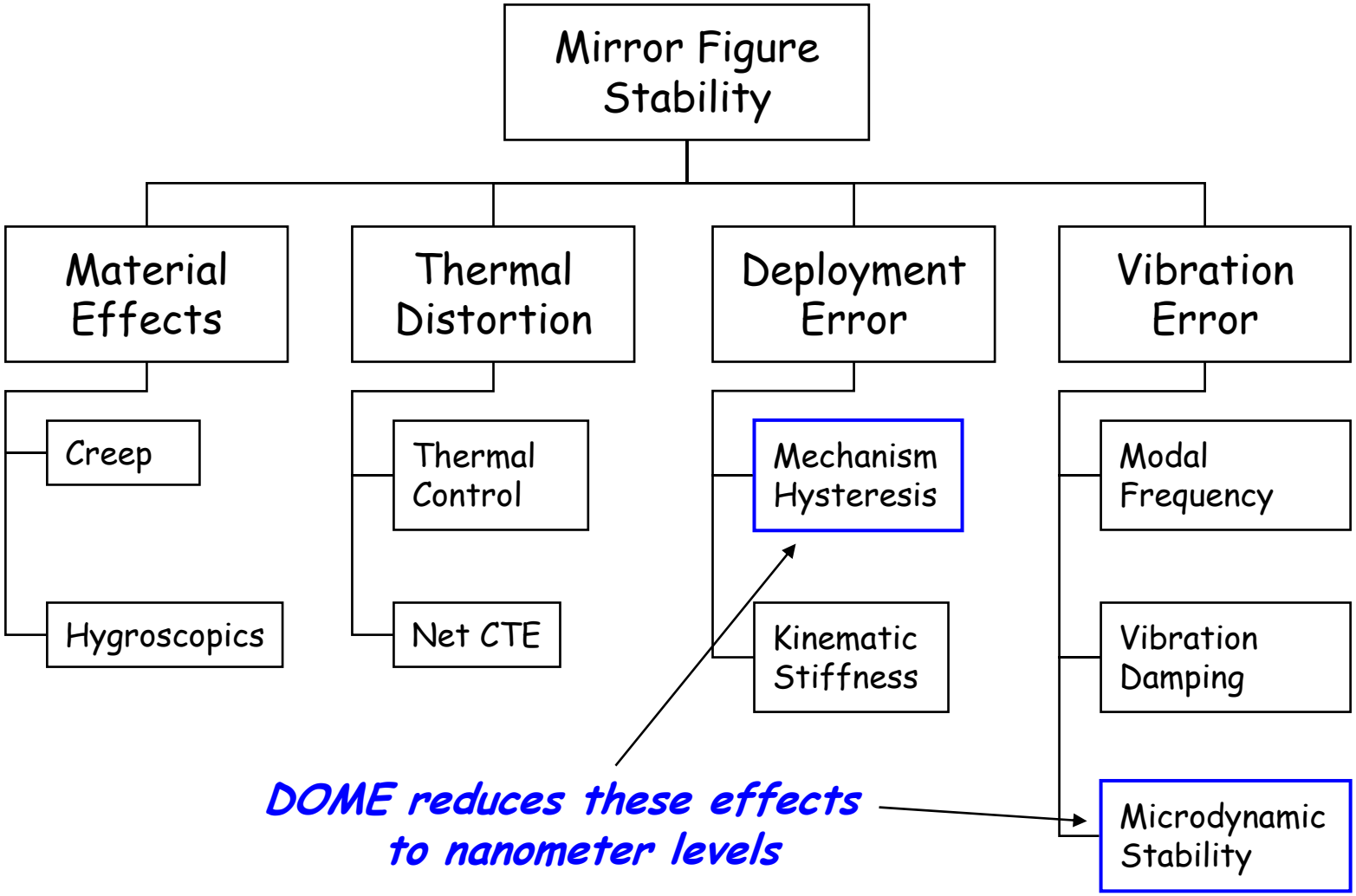

Single Petal Test Article

- Developed by Composite Optics, Inc (now ATK-COI) under SBIR contract ~1998
  - Mechanisms designed by M.S. Lake *et al* at NASA LaRC
  - Design heritage back to CU theses and prior experiments ~1995
- Preliminary experiments
  - ~200 nm repeatability in transverse axis
  - ~8-10 nm repeatability in deployment direction
- DOME project to complete development and verification of the technology embodied in this test article

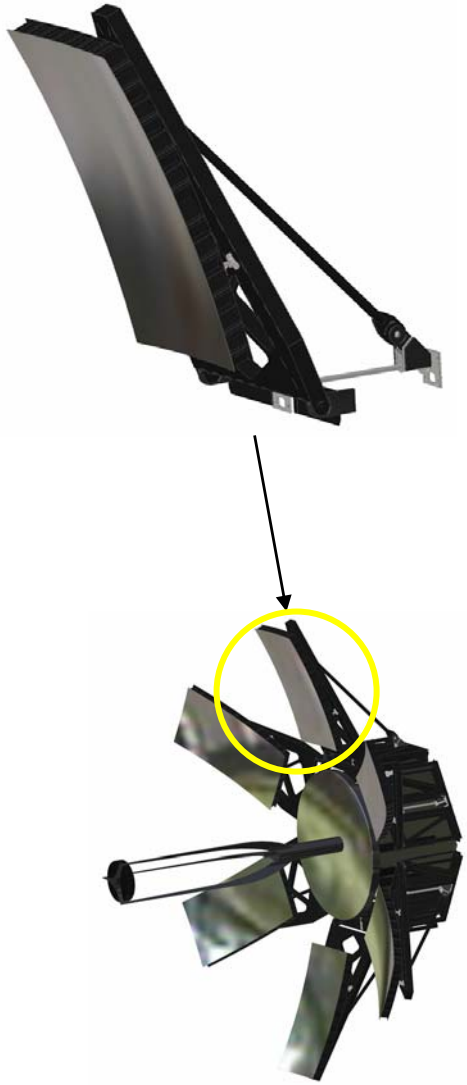

DOME will develop and verify from components to sub-system, and extrapolate to flight system

Sub-System Verification Experiment

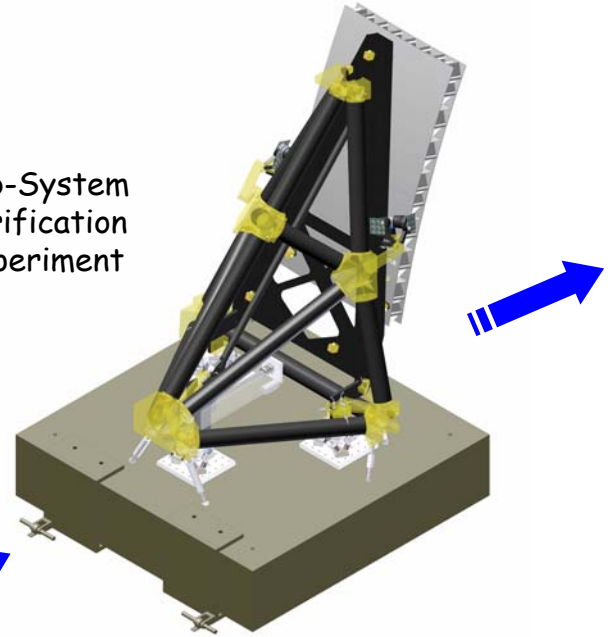

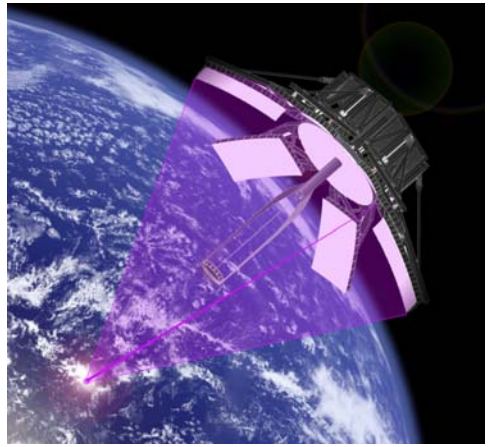

Flight System Model

$$M\ddot{q} + D\dot{q} + Kq = Q$$

$$\dot{y} = f(y,q)$$

$$Note: g = 0$$

Component Verification Experiments

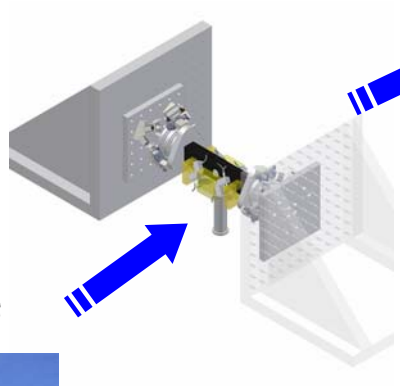

Precision Mechanism Components

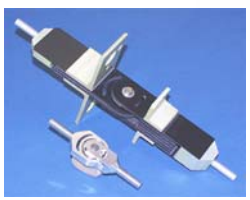

Sub-System Model Update

$$M\ddot{q} + D\dot{q} + Kq = Q + g$$

$$\dot{y} = f(y,q)$$

Component Model Update

$$\dot{y} = f(y,q)$$

Model uncertainties will be correlated with experimental uncertainties and propagated to the flight system model.

Development of Precision Hinges and Latches

- Design Approach
  - Regulate the transmission of stress through the mechanism to avoid the effects of friction
  - Predictable behavior by design
- Design Features
  - Mechanism hysteresis comparable to material hysteresis and creep
  - Overall stiffness and mass the same as the corresponding monolithic material

No net impact of deployment mechanisms

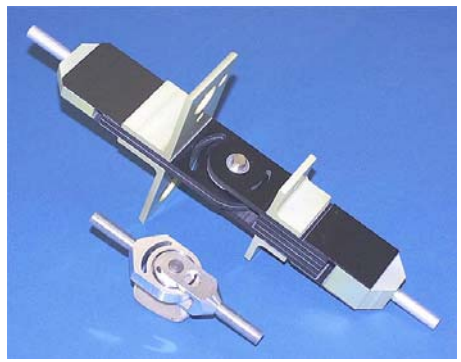

Latch reconfiguration allows for controlled (variable) preload employing deployment actuator

Single Petal Assembly

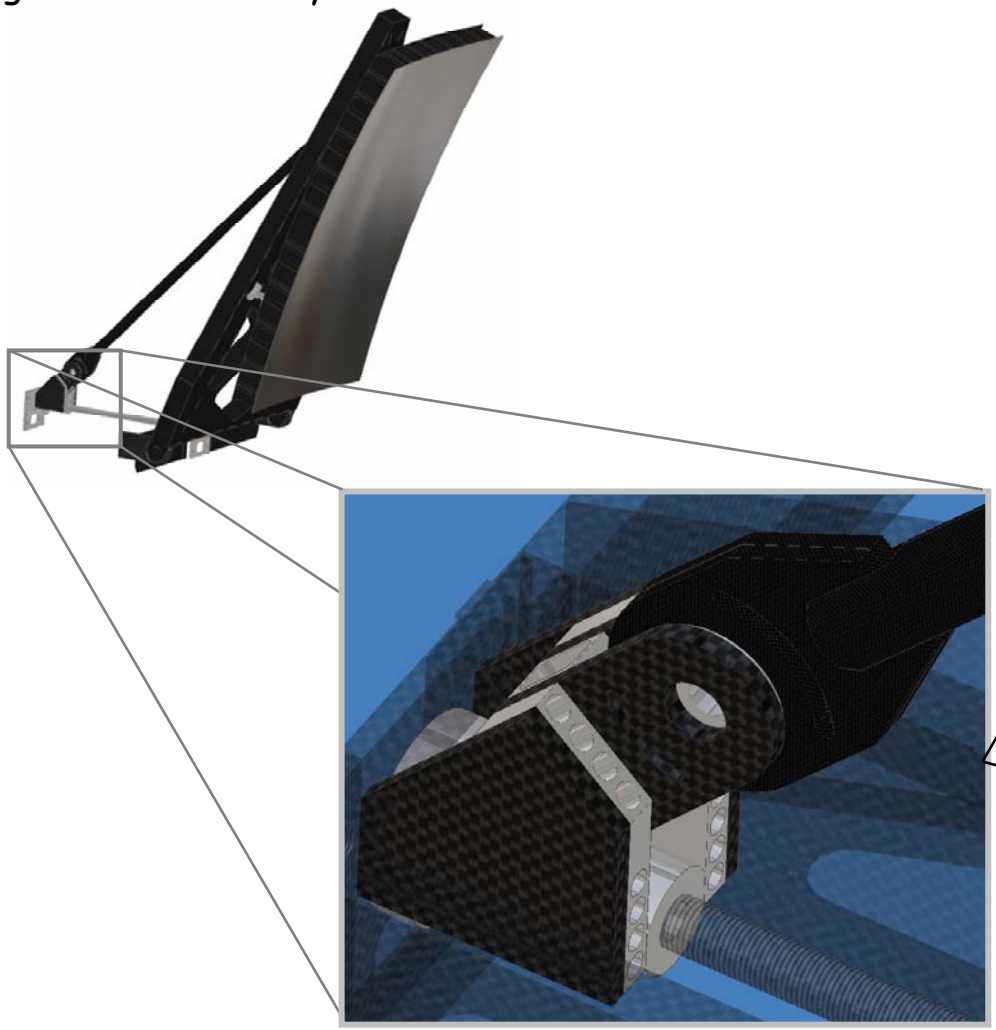

Traveling Latch Mechanism

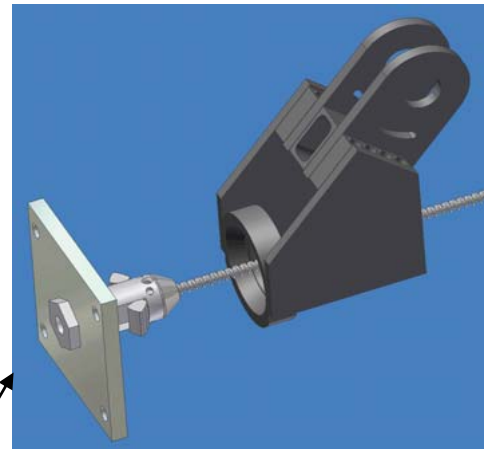

Orig. Design: Two-line contact with constant spring-driven preload

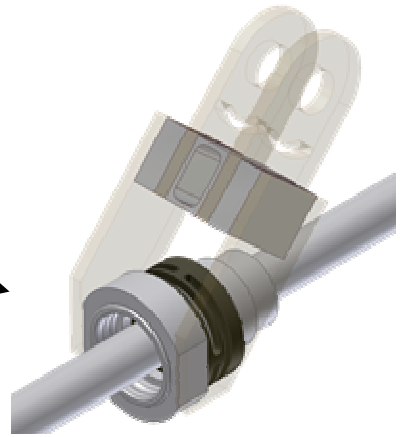

New Design: Angular contact bearing; ball screw-driven variable preload with compliant interface

Component experiments apply loads and measure component strain in simulated in-situ tests

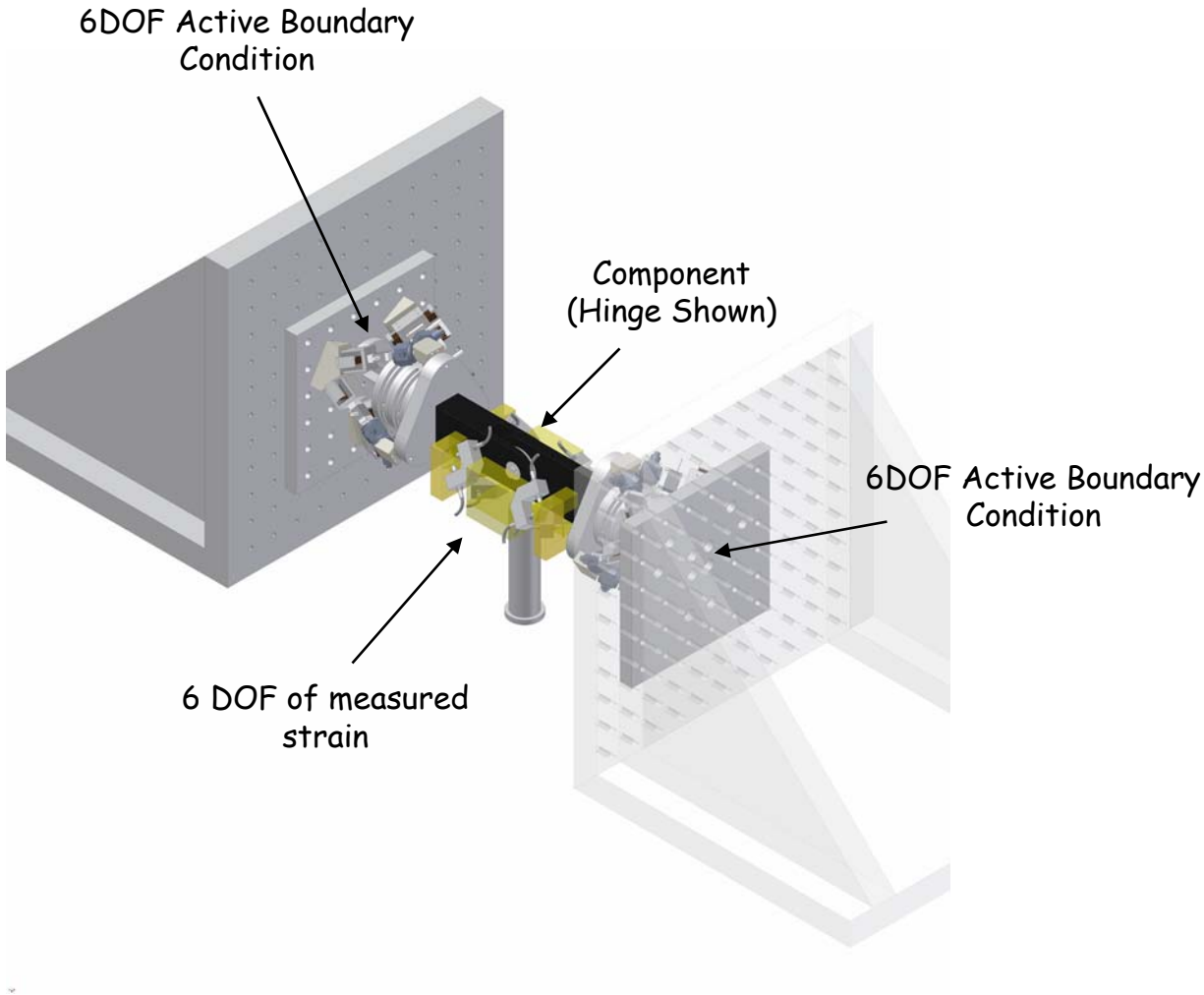

Active Boundary Condition Hexapods

- Measure 6DOF of forces
- Simulate attachment of the component to the structure via real time feedback control
  - Produces precisely controlled, simulated load environment on the component
  - Expedites model verification process

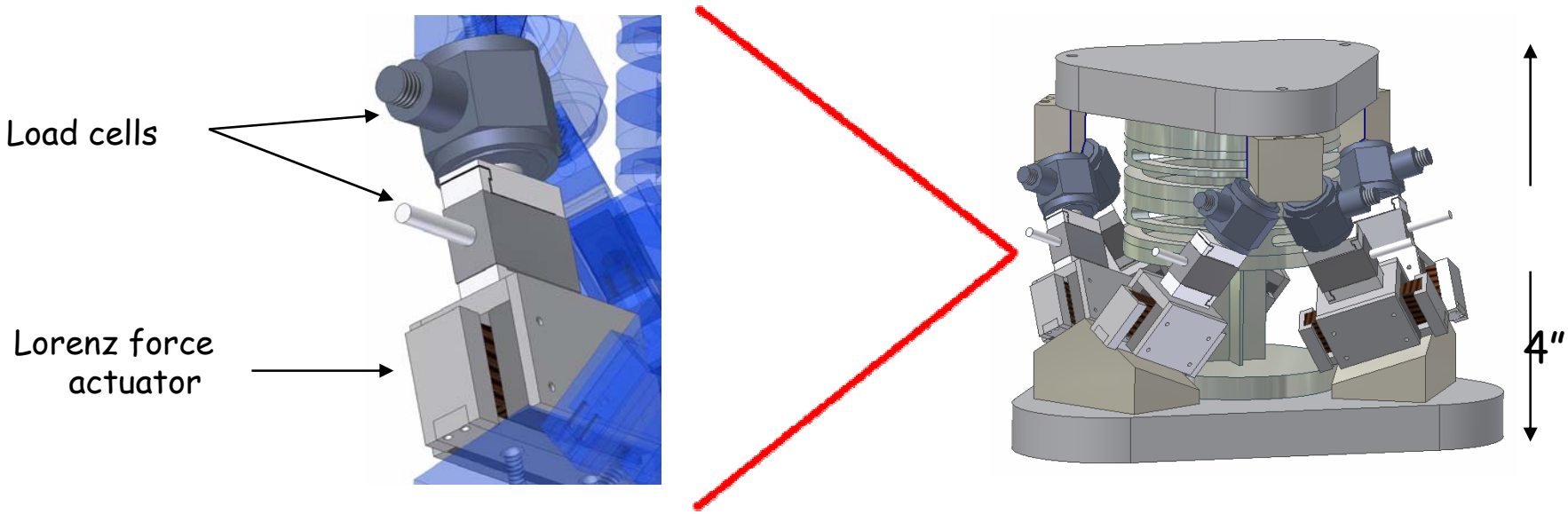

Sub-System Verification of Deployment Precision and Stability

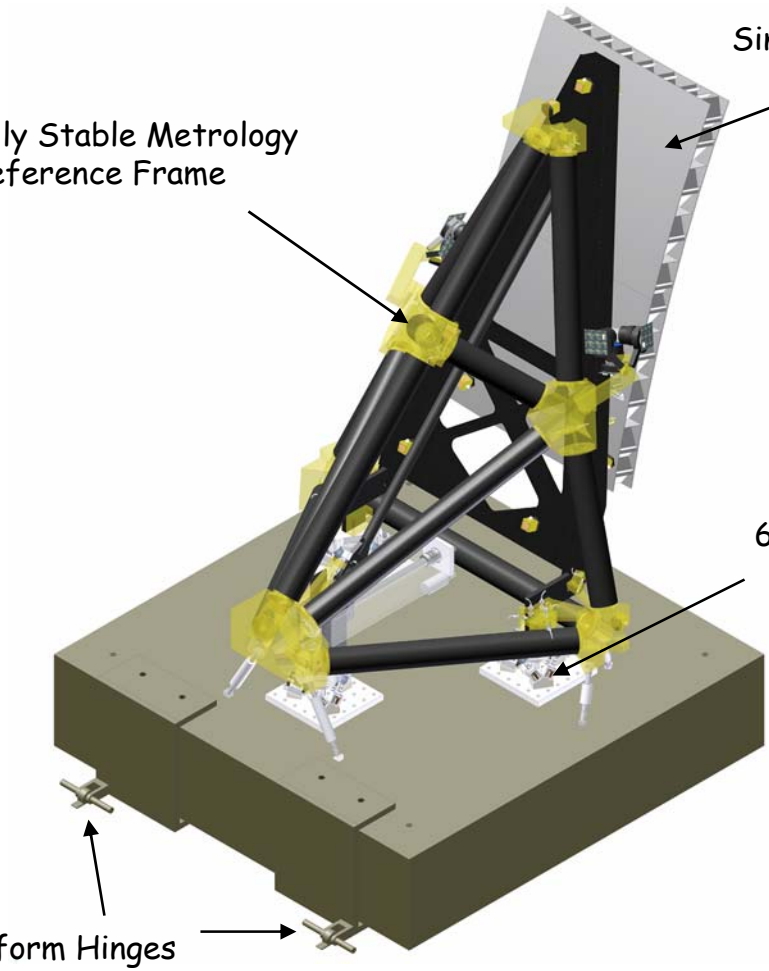

Sub-system experiments will be performed in two difference gravity orientations

- Test the ability to predict the effect of gravity preload on the nonlinear hinge and latch mechanics
- Entire test assembly can be reoriented intact

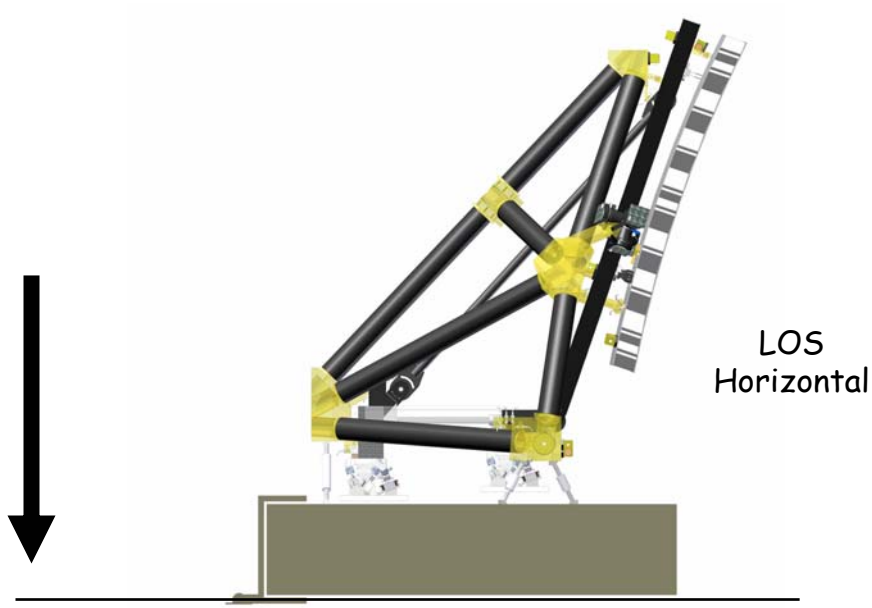

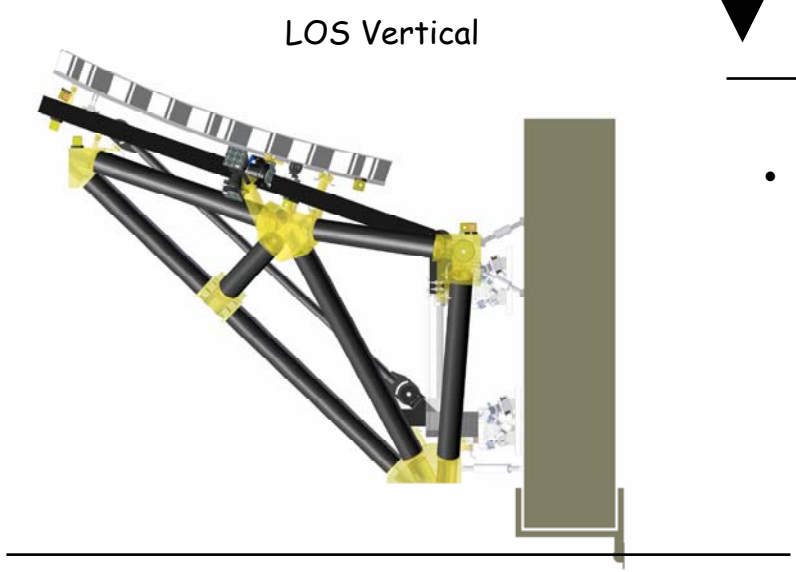

- Will also apply external loads to simulate gravity preload and effects
  - Verify key hypothesis

Sensor Selection and Placement

- Videometry System:
  - Persistent reference between deployments
  - 6 DOF measurements at 2 locations
- Eddy Current Sensors:
  - 2 DOF measurements using 38 sensors
- 3-axis Accelerometers:
  - 3 DOF measurements at 15 locations
- Temperature sensors
  - 32 locations
- 20 reaction loads at boundary conditions

Total of 189 measurements
(DC to 5KHz bandwidth)

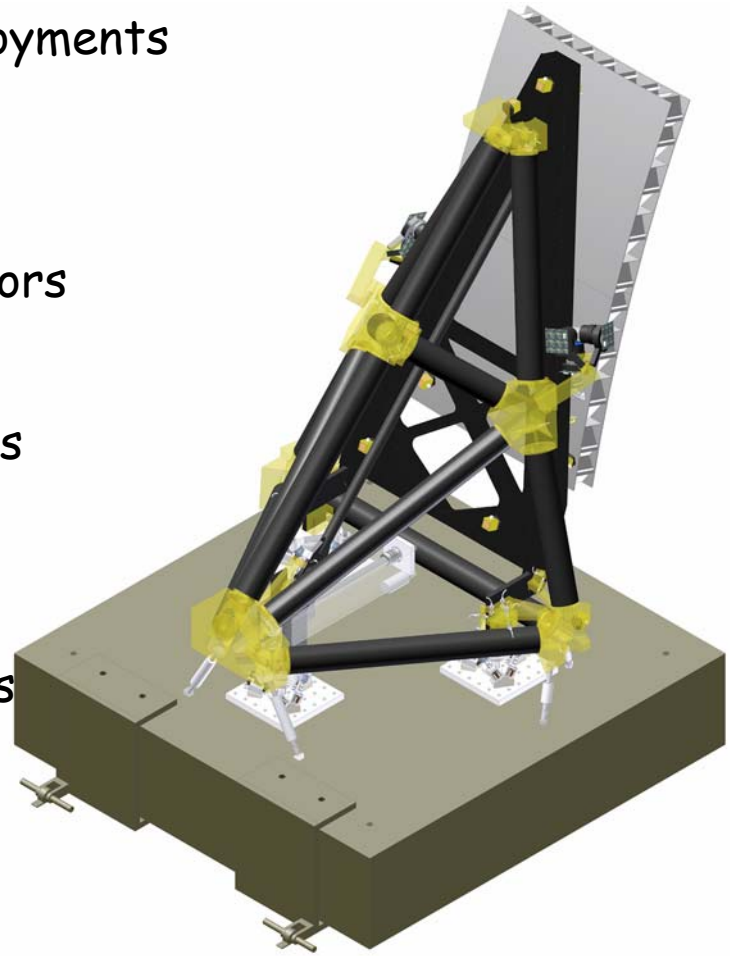

Metrology Frame Designed to Provide Stable Measurement Reference

- Purpose
  - Enables relative measurements throughout test article and BCs via short range metrology
- Requirements
  - Mechanical Stability

    Dynamic: First mode > 150 Hz

    Static/Gravity sag: < 10 µm
  - Thermal Stability

    Sensor-to-sensor CTE < 1 ppm/K

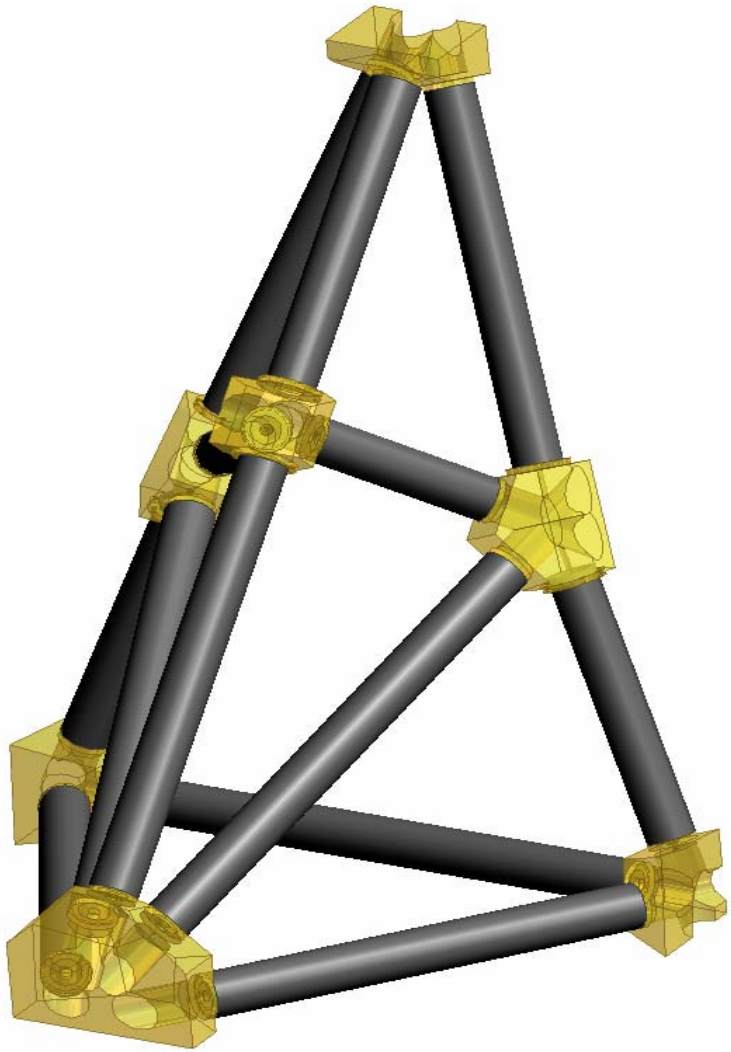

Thermal-Acoustic Stabilization Chamber

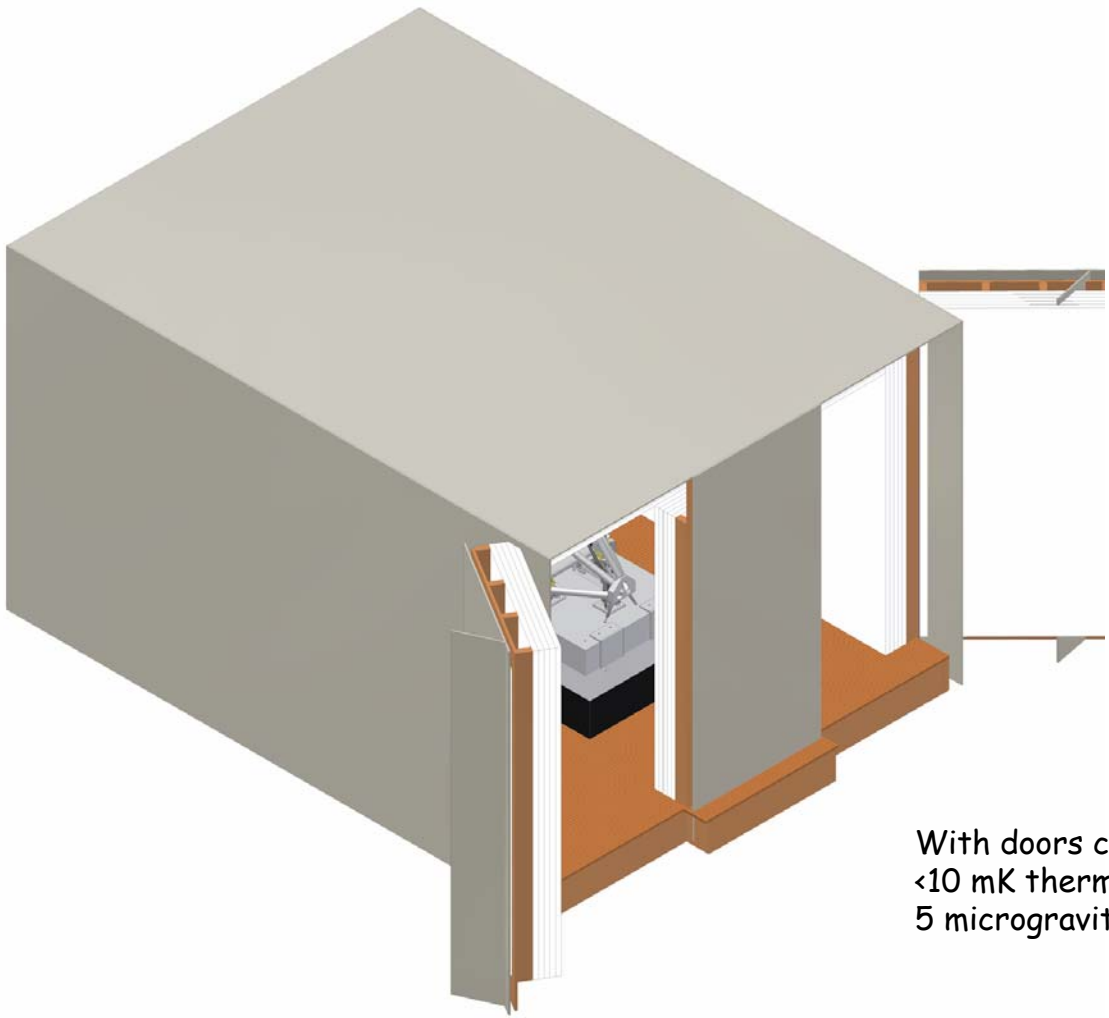

With doors closed, can achieve <10 mK thermal stability and 1-5 microgravity vibration levels

Theoretical Modeling Elements

- Objective
  - Develop a theoretical model of each experiment
- Include
  - Mechanism nonlinearity
  - Effect of gravity pre-stress
- Correlate experiment with the model
- Determine model uncertainties

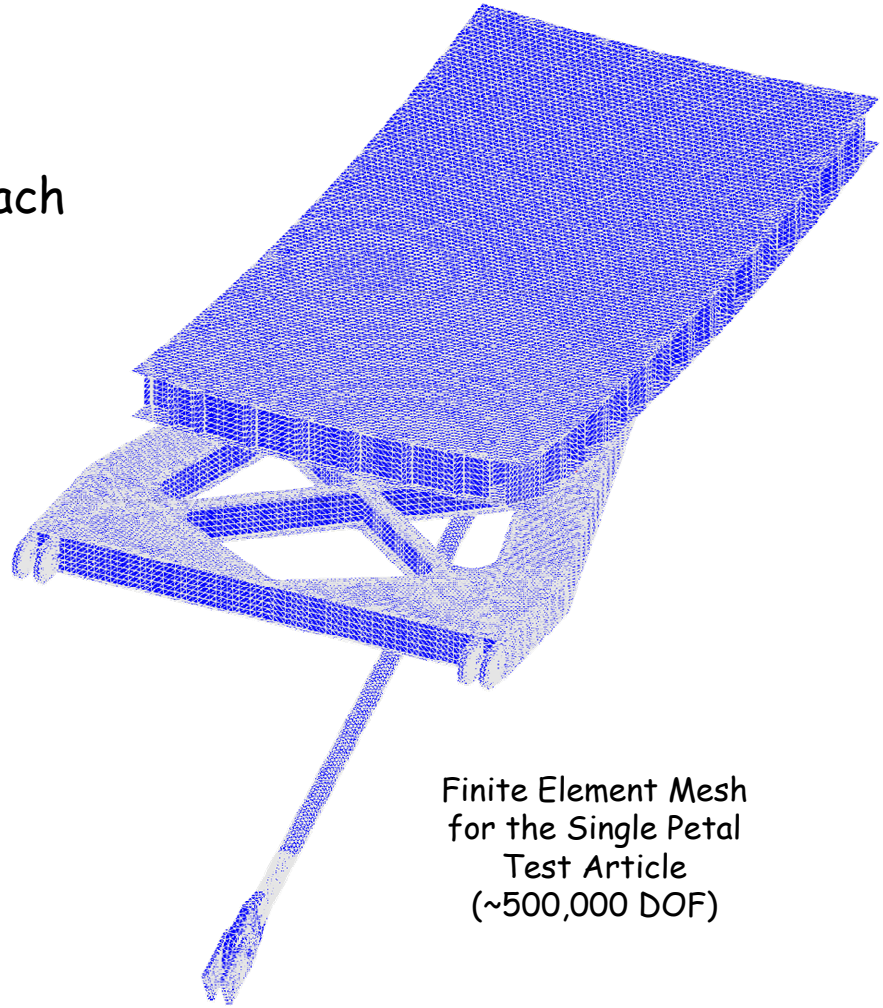

Finite Element Mesh for the Single Petal Test Article (~500,000 DOF)

Hinge and latch component models must integrate elastic mesh with nonlinear mechanism models

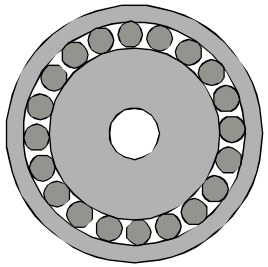

Bearing Model
(Including microslip mechanics per Hachkowski PhD)

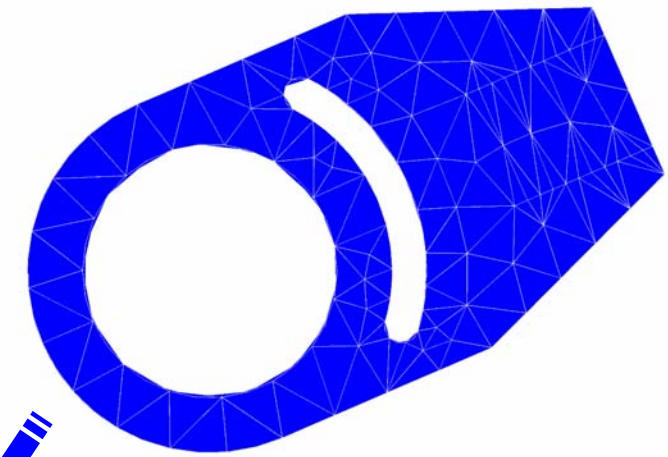

Elastic FE Mesh

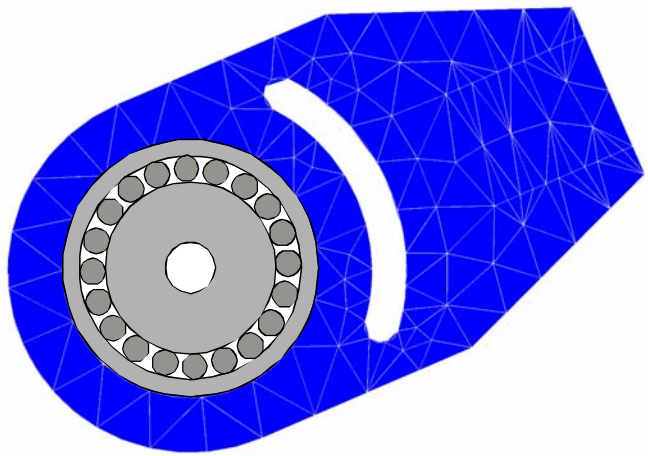

Integrated Hinge Model

Flight System Model

- Objective
  - Extrapolate the results of the single-petal experiment to the complete system.
- Optical Performance Metric
  - Predict the response of the optical performance of the system to expected on-orbit disturbances.
- Tolerances
  - Include statistical uncertainty in the predicted response

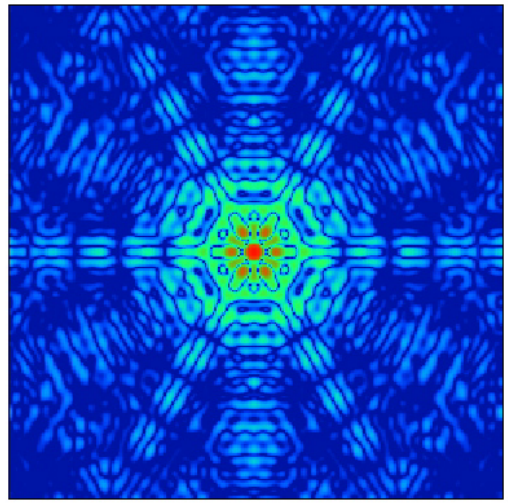

Summary

- DOME is developing and verifying key technology for deployable optics
  - Low cost, low mass mechanisms with predictable behavior

    Behave as though the frictional interfaces were absent
  - Methods for progressing from component to sub-system to system models
  - Verified models of components and sub-systems
- Focus is on a concept for deployed, 2.5 meter lidar receiver
  - Technology applies to any deployed optic
- DOME technology essential to the "virtual verification" of large optical systems
  - Nonlinear mechanical models (using "predictable" mechanisms)
  - Model and experiment uncertainty quantification
  - Verification of deployment repeatability and post-deployment stability
  - Predict on-orbit performance from 1-g experiments